The FNAL 200 MeV Linac

Dan Patterson

March 1986

Table of Contents

INTRODUCTION vi

1 PREACCELERATOR 1-1
1.1 Haefely 1-1
1.2 Haefely Operation 1-9
1.3 Sources 1-12
1.4 Extractor and Magnet 1-13
1.5 Column 1-17
1.6 Source Operation 1-17

2 750 keV TRANSPORT LINE 2-1
2.1 750 keV Chopper 2-4
2.2 750 keV Transport Line Operation 2-6
2.3 Changing Sources 2-7

3 TIMING AND PULSE SHIFTER 3-1
3.1 Timing 3-1
3.2 Enables and Interlocks 3-3
3.3 Pulse Shifter 3-5
3.4 Beam Inhibit and Enable Links 3-6

4 THE ALVAREZ STANDING-WAVE PROTON LINAC 4-1
4.1 Cavity Tuning 4-1
4.2 Cell Structure and Synchronous Phase 4-4
4.3 Design Considerations 4-10

5 LINAC RF SYSTEMS 5-1
5.1 Low-Level RF 5-1
5.2 High-Level RF 5-4
5.3 Modulator 5-8
5.4 RF System Operation 5-15

6 BUNCHER 6-1
6.1 Buncher RF System 6-1
6.2 Buncher Operation 6-3

7 QUADRUPOLES 7-1
7.1 Quadrupole Operation 7-4

8 200 MeV AREA 8-1
8.1 200 MeV Transport Line to Booster 8-2
8.2 Momentum and Emittance Analysis Lines 8-3
8.3 Linac Steering and Momentum Analysis 8-4

9 VACUUM SYSTEMS 9-1
9.1 750 keV Line Vacuum 9-1
9.2 Cavity Vacuum 9-2
9.3 200 MeV Area Vacuum 9-3
9.4 NTF Vacuum 9-6

10 WATER SYSTEMS....10-1
10.1 Preaccelerator Water Systems....10-5
10.2 Cavity and RF Water Systems....10-5
10.3 Water System Operation....10-9

11 NEUTRON THERAPY FACILITY....11-1
11.1 Beamline....11-1
11.2 Target and Collimator....11-2
11.3 Patient Setup....11-4
11.4 Control System....11-6
11.5 NTF Interlocks....11-5
11.6 RF4 Pulse Delay....11-10
11.7 NTF Operation....11-11

12 CONTROL SYSTEM....12-1
12.1 Link....12-1
12.2 Secondary Station....12-2
12.3 Primary Station....12-6
12.4 Operating Modes....12-7
12.5 Troubleshooting....12-8
12.6 Local Console Operation....12-10

13 LINAC SAFETY....13-1
13.1 Radiation Hazards....13-1
13.2 Linac Safety System....13-2

14 LINAC APPLICATIONS PROGRAMS....14-1
14.1 L25: Linac RF Status....14-2
14.2 L36: Linac Steering....14-4

15 LINAC CHRONOLOGY....15-1

GLOSSARY.... G-1

REFERENCES.... R-1

LIST OF SCHEMATICS.... S-1

This document assumes that the reader is familiar with the basic terms of electromagnetism and accelerator physics. Terms that are unique to accelerator systems are written in *italics* and may be found in the glossary.

Those not familiar with accelerators are encouraged to read Proton Synchrotron Accelerator Theory by E.J.N. Wilson, which may be found in the back of Basic Booster for Beginners by John Crawford.

Technical documents referenced to in the text are referred to by their DOSYL (Document Systematic Locator) designations, as follows:

OPBULL	Operations Bulletin
TM	Technical Memo
FN	Physics Note
EXP	Experimental Note
HDWREL	Hardware Release
SFTREL	Software Release

Many other useful documents are often not indexed through DOSYL, particularly papers given at conferences and IEEE reports. The reader is encouraged to enter relevant material into the DOSYL system so that it may be more easily referenced. DOSYL is accessed by logging on to the development VAX with username DOSYL; the program will take it from there.

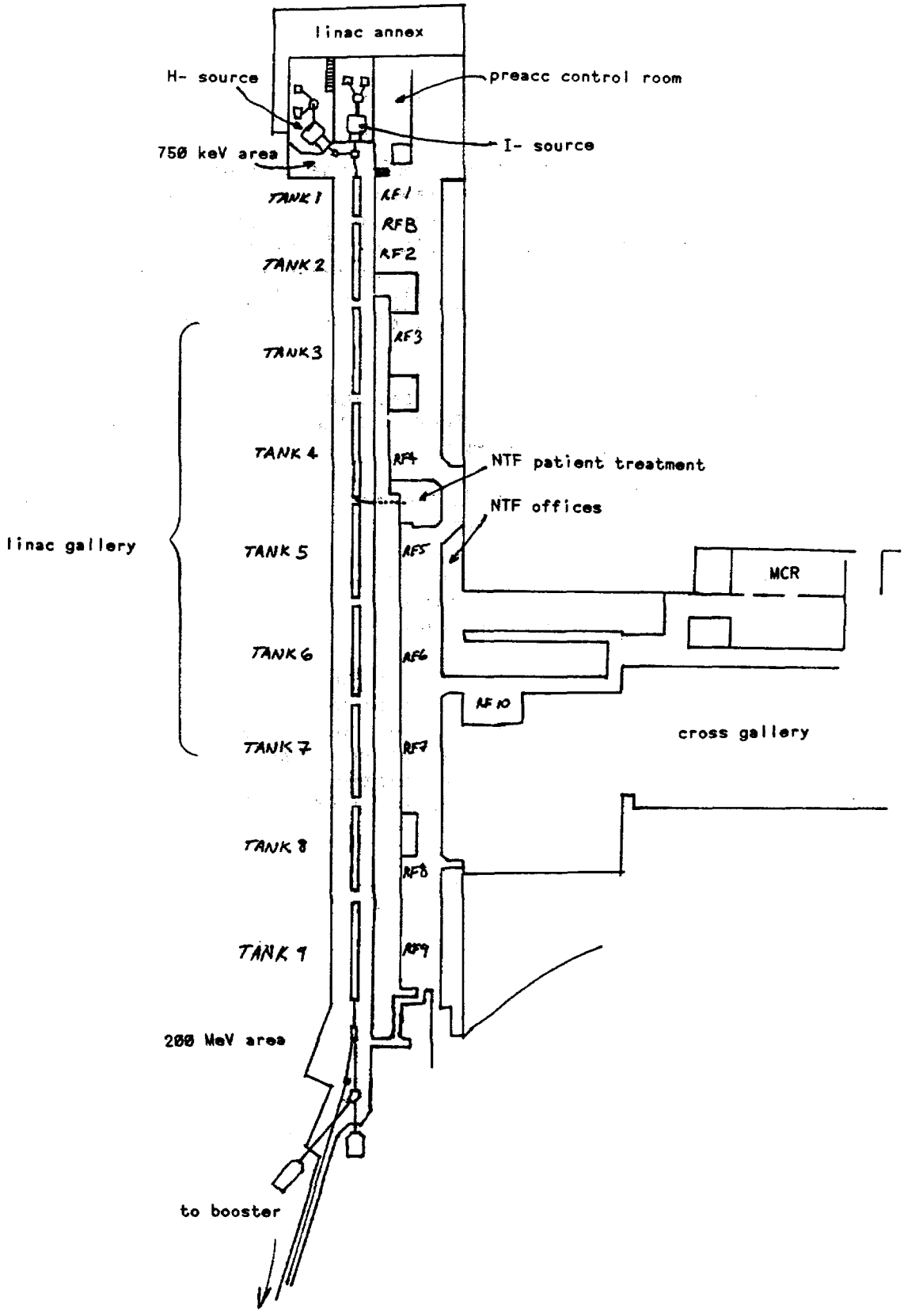

figure 0.1: linac component layout

INTRODUCTION

The FNAL linac (fig. 0.1) produces pulses of H- ions for injection into the booster accelerator. The booster is a rapid-cycling synchrotron with a fixed cycle time of 1/15 second (66 msec) due to the nature of its magnet power supply system, which is designed to resonate at 15 Hz. As an injector for the booster, the linac has the same cycle time of 66 msec.

The linac uses an electrostatic *preaccelerator* (of Cockcroft-Walton design) to produce H- ions at energies up to 750 keV (1 eV = one *electron volt*). These are then accelerated to 200 MeV in a linear series of nine standing-wave *RF cavities* that resonate at 201.24 MHz. *Transport lines* then lead either to the booster injection girder or to beam dumps. The entire linac is about 500 feet long.

The FNAL linac is patterned after, but not identical to, a 200 MeV linac built at Brookhaven National Laboratory beginning in 1964. Construction of the FNAL linac began in May, 1968, and 200 MeV beam was first produced on November 30, 1970.

A second function of the linac is to provide 66 MeV H- ions for the production of neutrons used to treat cancer. The Neutron Therapy Facility (*NTF*) is a program which evaluates the effectiveness of neutron therapy against other methods used in treating certain types of tumors.

The FNAL 200 MeV Linac

1 PREACCELERATOR

The two FNAL preaccelerators each provide up to 750 keV H- ion beams for acceleration in the linac. Each "preacc" consists of an H- ion source inside a *dome* that is kept at a potential of about -750 kV. Negative ions produced at the large negative potential are accelerated as they pass from the source to ground (the wall of the preaccelerator enclosure, or *pit*). Each preaccelerator then has a transport line to the linac, with the last portion common to both systems. At any given time one preaccelerator is on line, while the other is held in reserve or undergoes maintenance. The two sources are called "H-" and "I-" for purely archaic reasons; their construction and operation are virtually identical.

1.1 Haefely

The energy of the ions leaving the preaccelerator comes by virtue of the large potential at which the ions are produced. This potential is provided by a high-voltage multiplier which takes 5 kHz, 75 kVAC and converts it to -750 kVDC. The power supply that does this was manufactured by Emil Haefely CIE AG, Bern, Switzerland; thus the name, *Haefely*. The dome is also built by this company, but "Haefely" generally refers to the power supply itself.

One topic guaranteed to start lengthy arguments and harried references to dusty notebooks is the principle of operation of the Haefely power supplies. Each is simply a five-stage diode voltage multiplier. Figure 1.1 shows two stages of such a multiplier. Two stacks of capacitors are linked by a zigzag array of diodes. The capacitors on the right are "DC"; the charge on them is relatively constant. The capacitors on the left are *coupling capacitors*; they hold a charge plus couple the AC from the source at the bottom up the stack. (Every capacitor on the left side sees the AC voltage from the source.)

An AC transformer at the bottom provides a voltage at point A of $V_o \sin\omega t$. Point B is at ground. Capacitor A-C couples the voltage at point A to the point C. When C becomes more positive than B, charge flows through diode B-C, charging capacitor A-C to $-V_o$. The voltage at point C is then the sum of the DC and AC components:

$$-V_o + V_o \sin\omega t$$

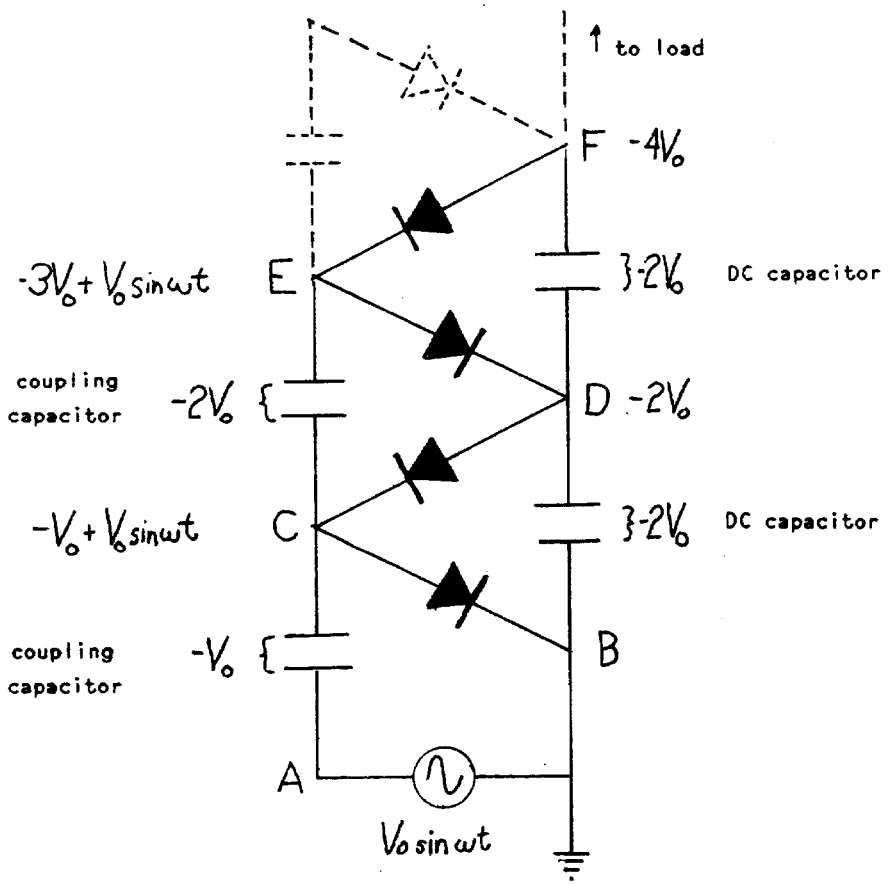

figure 1.1: diode voltage multiplier

On the next half-cycle, the minimum voltage at point C, $-2V_o$, charges capacitor B-D through diode C-D. The voltage at point D is then a constant $-2V_o$ because current cannot flow back through the diode.

The second stage operates in a like manner: the maximum voltage at C is just zero, which causes capacitor C-E to charge to $-2V_o$ (the voltage at point D) through diode D-E. The voltage at point E is then the sum of the DC voltages on capacitors A-C and C-E, plus the AC component (coupled from C to E through capacitor C-E):

$$-V_o + (-2V_o) + V_o\sin\omega t = -3V_o + V_o\sin\omega t$$

The minimum voltage at point E, $-4V_o$, then charges capacitor D-F through diode E-F to the maximum difference of points D and E, or $-2V_o$ (remember, the voltage at D is a constant $-2V_o$). The voltage at F is a constant $-4V_o$, since, again, current cannot flow back through the diode. Additional stages would likewise add $-2V_o$ per stage.

Figure 1.2 shows a schematic of an actual Haefely. Note that there are two legs with coupling capacitors, connected

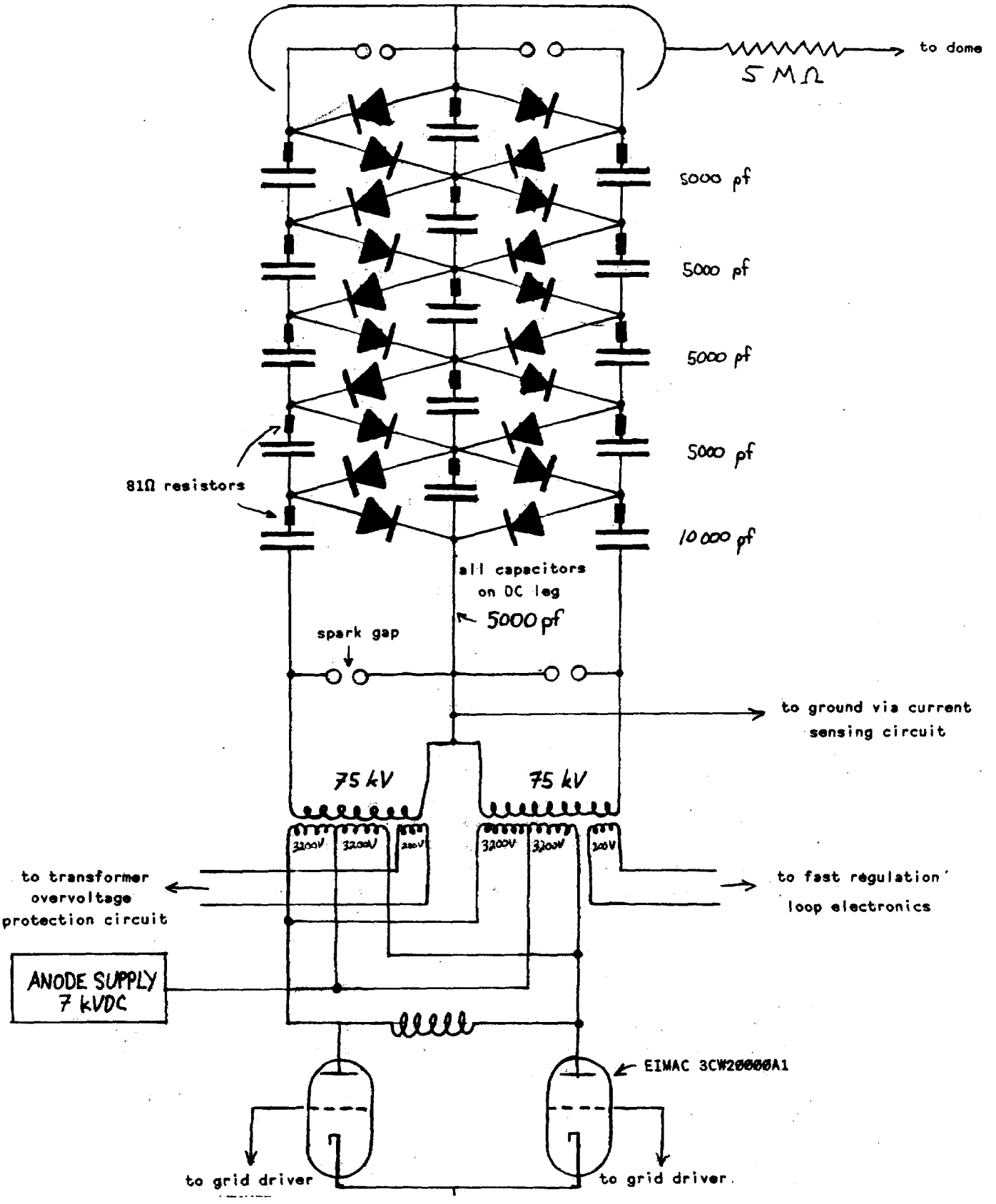

figure 1.2: Haefely voltage multiplier

to a common "DC" leg, which is connected to the dome at the top and to ground (through the current-measuring circuitry in the preacc control room) at the bottom. Two coupling legs are used to reduce the ripple at the output of the multiplier. Each coupling leg is driven by its own 75 kVAC transformer; five stages thus give a maximum output of 5(-2Vo) = -10Vo, or -750 kVDC. Note: all Haefely drawings outside of this document show diode orientation for positive, not negative, high voltage. The diode orientation in figure 1.2 is correct. The actual physical layout of the Haefely power supply is shown in figure 1.3.

The two high-voltage transformers each have two 3200 volt primary windings, a 75 kV secondary, and a 200 volt tertiary winding. The 200 volt winding from one transformer is used for overvoltage protection of the Haefely itself (sec. 1.2). The other is used in one of the voltage regulation feedback loops, which will be discussed later. Both transformers are located in the preaccelerator pit, along with the voltage multiplier and the dome containing the ion source.

The output voltage at the top of the multiplying stack is sent to the dome through a 5 MΩ current-limiting resistor. The dome itself is isolated from ground by a series of *bleeder resistors* with a total resistance of 4250 MΩ. These resistors are contained in one of the five "legs" that support the dome (fig. 1.4). The bleeder resistor for the I- system is also in parallel with a series of capacitors and resistors which are part of the famous *bouncer circuit*. This unused system is designed to reduce the voltage droop caused by ions leaving the dome during acceleration to 750 keV; the only practical difference that the existing circuit components make is that the increased capacitance to ground of the I- system makes the voltage droop during beam time only 3-4 kV for I-, where it is about 7 kV for H-. This droop is not significant for operating purposes, as long as it is consistent.

The potential on the dome is monitored by first dropping the voltage through a *metering resistor* that runs from the side of the dome to the pit wall. This resistor consists of 600 precision resistors in series with capacitors, wired together in five elements of 425 MΩ each for a total resistance of 2125 MΩ. An oil circulating system for cooling this resistor exists, but is not used. The resistor terminates at the pit wall in a small aluminum box containing a voltage divider which drives the analog HV meter on the Haefely control panel as well as the voltage regulation loop electronics.

Regulation of the high voltage on the dome is handled by two feedback loops which act to keep the voltage within a tolerance of 0.25% at -750 kV. A slow feedback loop corrects for fluctuations up to a frequency of about 1 Hz; a fast loop handles frequencies up to about 15 Hz. The slow loop actually compares the measured voltage to the command voltage to produce an error signal. The fast loop looks at the 200 V tertiary winding in one of the HV transformers and

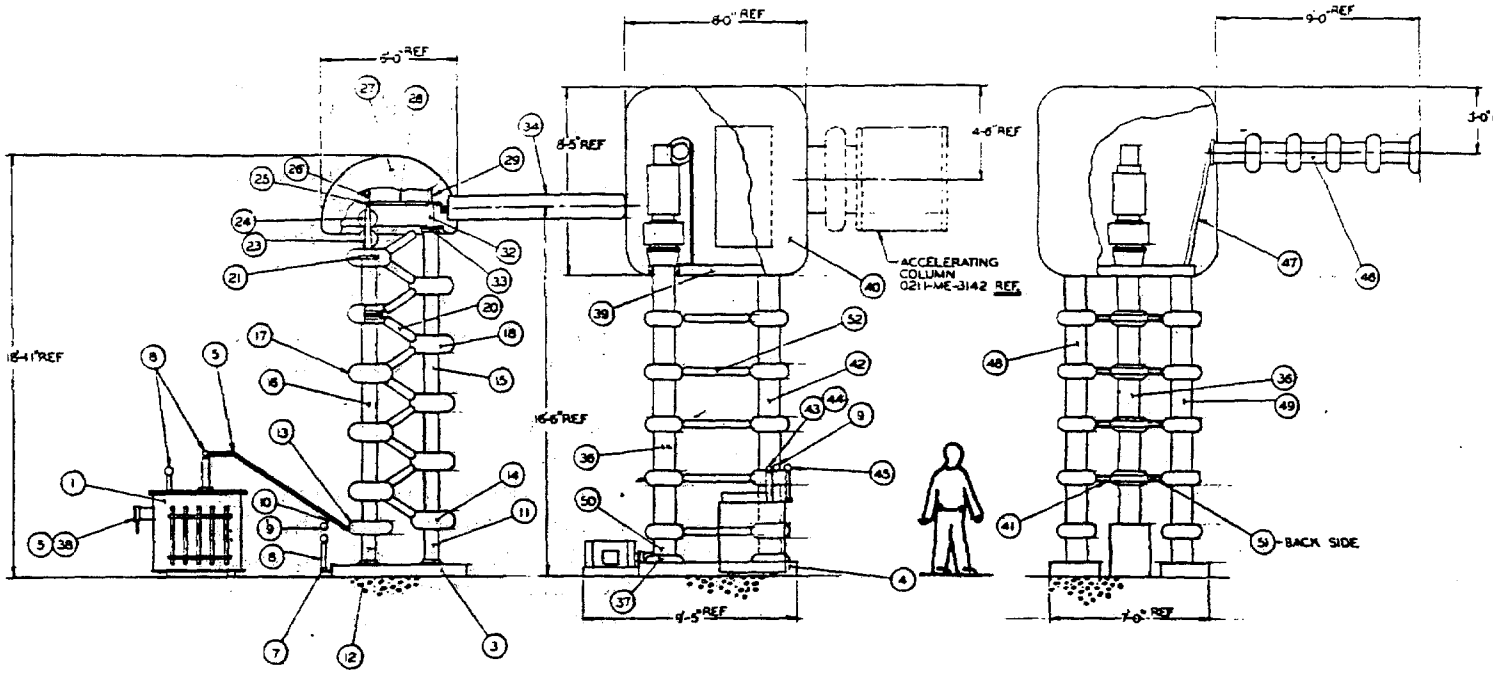

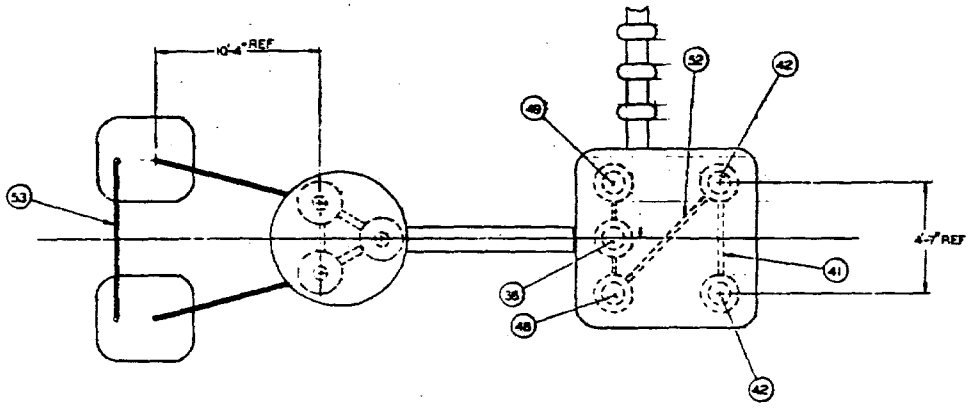

53	2-5256891	BRACES	
52	2-5255389	BRACES	
51	3-5254403	BRACES	
50	2-5256150	CYLINDRICAL ISOLATOR	4
49	2-5255151	CYLINDRICAL ISOLATOR	
48	0-5255098	STEERING POTENTIOMETER	
47	1-5256354	BRACE	
46	0-5256340	POTENTIOMETER	
45	2-5255391	SPARK-GAP	
44	3-5254418/5	BALL	
	2-5255389		
42	0-5255302	COLUMN CAPACITOR	
41	2-5256444	RESISTOR	4
40	0-5256348	SHIELDING HEAD	
39	0-5256353	HIGH VOLTAGE TABLE	
38	2-5256122	JUNCTION BOX	
37	1-5255099	SHIELDING	6
36	0-5255360	INSULATOR	
35	2-5256122	JUNCTION BOX	
34	0-5256360	RESISTOR	
33	2-5255456	FLANGE	
32	3-660100	COLUMN ISOLATOR	
31	2-5255236	SUPPORT	
30	4-5255455	THREADED ROD	
29	3-5255350	SUPPORT FRAME	
28	2-5255236	SUPPORT FRAME	
27	0-5255257	SHIELDING HEAD	
26	4-5255454	THREADED ROD	2
25	4-5255453	SPACER	2
24		BALL	3
23	2-5255450	SUPPORT	2
22	3-660098	COLUMN-ISOLATER	2
21	2-5255451	FLANGE	2
20	1-5255252	RECTIFIER	2
19	2-5255229	HOLDER	21
18	3-5255250	SHIELDS	4
17	1-5255251	SHIELDS	10
16	1-5663417	CAPACITORS	2
15	1-5663417	CAPACITORS	13
14	1-5255230	SHIELD	1
13	1-5255253	SHIELD	2
12	2-5663418	SUPPORT COLUMN	2
11	2-5663418	SUPPORT COLUMN	1
10		SPACER BAR	2
9	2-533445	BALL	5
8	2-5255391	SPARK-GAP	2
7	4-5256123	FOOT	2
6	4-5252799	SHIELD	4
5	2-5254397	TRANSF CONNECT ROD	2
4	0-5256460	GROUND PLATE	1
3	1-5255144	GROUND PLATE	1
	0-5255185		1
1	4-213434	HIGH VOLTAGE TRANSF	2

figure 1.3: I- Haefely installation

samples sucessive peaks in the voltage; this is compared with the command voltage to create a second error signal. The two error signals are then summed together with the command voltage to drive the transformer.

The slow loop begins at the voltage divider where the output voltage (about 4.5776 V at -750 kV) is sent via a twinax BNC to the *monitor/control module* in the Haefely control racks. The voltage is sampled and held while a 14-bit A/D digitizes it. The digitized monitor voltage is then fed through 14 *optical isolators* (light links) to isolate the input circuitry from ground and reduce noise due to ground loops. The signal then travels to a latching register which is sampled by the computer to produce the analog readback in the main control room (MCR). A second path leads to the *data selector*, which takes the digitized monitor and command voltages and sends them to the LED displays on the front of the module. The digitized command voltage comes from a 14-bit binary command generator, which is in turn fed by either a computer command or a local knob input.

The digitized monitor and command voltages are also sent via the crate wiring to the adjacent *regulator/oscillator module*. Here the signals are converted back to analog voltages and fed into a differential amplifier to create an error signal, which is then integrated and summed with the output of the fast regulation loop. A FET switch that zeroes the slow loop error signal and disconnects the fast loop input (and thus reduces the HV power supply output to zero) is controlled by the anode power supply on/off status (to protect the power amplifier tubes from being turned on with no drive signal) and by the *reference source* on/off switch (sec. 1.2).

The fast loop begins at the 200 V winding in one of the HV transformers; the 5 kHz sinusoidal output is first passed through a zero-bound circuit which removes the negative portions of the signal. A sample and hold signal, synchronized to a 5 kHz oscillator, samples the peak voltages which are then fed through a low-pass filter to roll off all frequencies above 15 Hz. This signal then represents the variation in the drive voltage of the transformer. It is summed first with the command voltage (from the same A/D as the slow loop) and then with the slow loop error. A zero-bound limiter insures that the resultant drive amplitude lies between zero and some predetermined maximum voltage. An analog multiplier modulates the drive signal to produce a 5 kHz square wave, which then is smoothed by a fourth-order multiple feedback bandpass filter. The resultant sine wave then drives the grid driver amplifier, which in turn modulates the voltage on the grids of two EIMAC 3CW20000A1 *triodes*, which comprise the power amplifier that drives the transformer primary windings. For the I- system, these tubes are located in racks in the

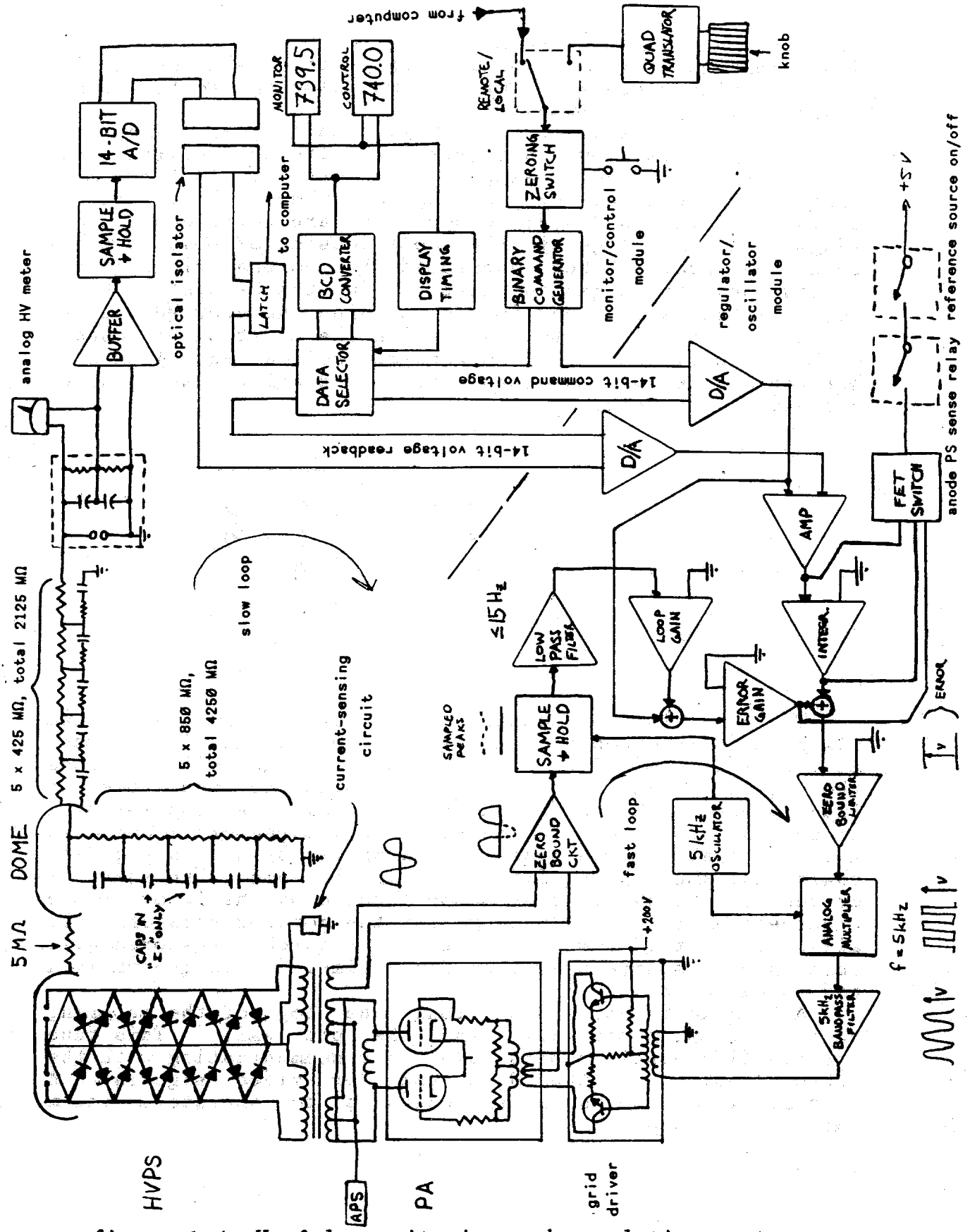

figure 1.4: Haefely monitoring and regulation systems

preaccelerator control room, next to the I- anode supply. The power amplifier and anode supply for the H- system are cleverly hidden beneath the stairs leading to the second floor of the preacc annex.

The HV transformer, voltage multiplier, and dome installation are shown in figure 1.3. The multiplying stack is rather impressive, being just short of 19 feet tall. Diodes are encased by Plexiglas tubes filled with a synthetic silicon fluid; capacitors are covered by *corona rings*. The five legs of the dome consist of *G-10* (a glass epoxy insulator) tubes encircled by corona rings at the points where the segments meet. In the H- system, three legs are hollow and the fourth contains the 4250 MΩ bleeder resistor. The I- is the same with the addition of bouncer circuit capacitors in two otherwise hollow legs, linked by horizontal-running resistors. As stated before, the bouncer circuit is not used.

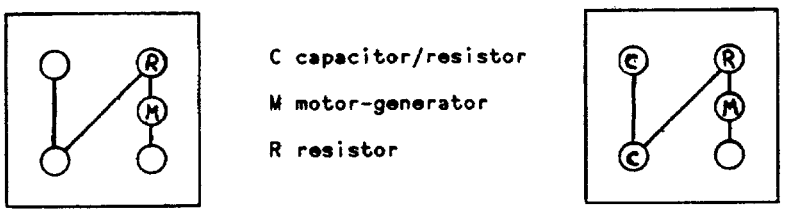

H- *dome leg assignments* I-

The dome itself contains the power supplies, vacuum pumps, and microcomputer necessary to run the ion source. At a potential of -750 kV, a moment's thought will convince the reader that running power cables to the dome is inadvisable. 208 and 120 VAC for the dome are supplied by a 15 kW generator (more correctly, an alternator) located in the dome itself. The generator is driven by a rotating G-10 shaft that runs up the fifth leg of the dome. The shaft is driven by a 25 kW electric motor located on the floor of the preaccelerator pit. Turning off the motor-generator kills all power to the dome, and even if quickly restored will upset normal source operation for a time. It is generally a bad thing to do.

A Plexiglas tube runs along the top of the metering resistor between the dome and the pit wall. This tube carries fiber-optic cables used for communicating with the microprocessor in the dome and for video signals. A nitrogen gas line supplies pressure to operate a vacuum valve in the dome.

1.2 Haefely Operation

The Haefely HVPS is controllable either through the local control panels or through the computer system. The computer system communicates with the Haefely by way of a shielded, twisted pair of wires (*MIL-STD-1553B* digital bus) that run from the local microcomputer to interface cards mounted in a *Eurobus crate*. This small crate is located in the rack containing the Haefely control relays.

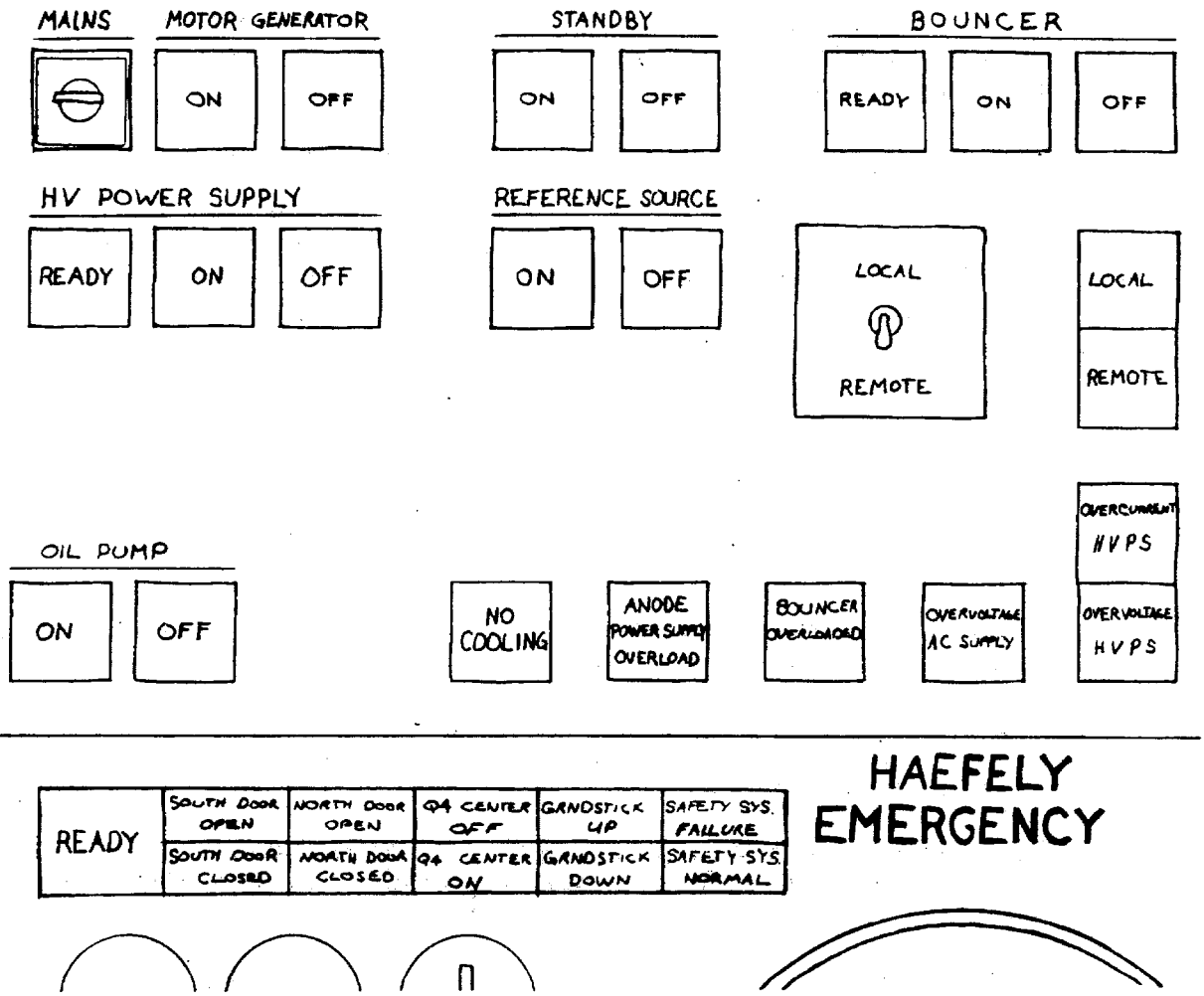

figure 1.5: Haefely control panel

Figure 1.5 is a sketch of the control panels for the H-Haefely. At the upper left is a keyswitch labled MAINS. Turning this key clockwise removes power from the upper control panel, thereby shutting off the reference source, HV power supply, PA filaments, and motor-generator. The same result can be had by pressing the enormous orange HAEFELY EMERGENCY button on the lower panel. If the source is in

use, this is inadvisable, as it will shut the anode supply off for five minutes, and the source for even longer.

The MOTOR GENERATOR ON/OFF switches control the power to the 25 kW motor that supplies power to the dome. Have a good reason ready before turning this off.

STANDBY ON/OFF controls the PA tubes' filament supply. When turned on, a timer prevents the anode supply from coming on for five minutes. This timer is activated whether or not the filaments are cold. It is not necessary to turn the filaments off unless there is work being done on the tubes themselves.

The BOUNCER switches aren't connected to anything.

HV POWER SUPPLY ON/OFF controls the anode supply for the PA tubes. It must be on before the reference source will turn on (this is done to protect the tubes). READY is the sum of anode power supply and safety system interlocks, which will be described shortly.

REFERENCE SOURCE OFF zeroes the HV transformer drive signal in the monitor/control module. This causes the output of the HV transformer to go to zero, and the dome HV will bleed down through the 4250 MΩ resistor. The anode power supply is cycled on and off in this state; it must be off before an access to the preaccelerator pit is made.

The LOCAL/REMOTE switch disables/enables control through the computer system. All functions are available remotely.

OIL PUMP ON/OFF controls nothing, but it must be on so that other interlocks in the Haefely control circuitry will permit the supply to be turned on.

The following anode power supply interlocks must be made up before HV POWER SUPPLY READY (anode power supply ready) will be lit:

NO COOLING is the sum of water flow and temperature switches on the PA water system, as well as PA cooling fan power. The I- system also has a water pressure switch.

ANODE POWER SUPPLY OVERLOADED is an overvoltage trip of (what else) the anode supply.

BOUNCER OVERLOADED is not connected.

The next three interlocks will trip off the reference source, but leave the HVPS on:

OVERVOLTAGE AC SUPPLY is an overvoltage trip of the HV transformer. This circuit looks at the "other" 200 V transformer winding.

OVERVOLTAGE HVPS is an overvoltage trip of the voltage multiplier stack and dome. It is simply the trip point on the analog voltage meter located in the panel above the upper control panel.

OVERCURRENT HVPS is sensed by a *thyratron* circuit that looks at the current actually being drawn by the voltage multiplier. This circuit is electrically in the path from the base of the DC leg of the multiplier to ground. It is physically located in a box below the metering resistor voltage divider.

The following safety interlocks must be made up before HV POWER SUPPLY READY (anode power supply ready) will be lit:

The DOOR OPEN indications (NORTH and SOUTH for H-, SIDE and PIT for I-) are connected to microswitches on the pit doors. The NORTH DOOR OPEN circuit for the H- system is also connected to a storage room door that is only accessible from inside the pit.

Q4 CENTER OFF (H- only) refers to the center element of the first *quadrupole triplet* in the H- 750 keV transport line. If this element is off, the H- Haefely is turned off to prevent unacceptable levels of X-ray radiation in the H- 750 keV transport line area, which would be caused by high-energy electrons striking the 45° bending magnet (sec. 13.1).

ELEVATOR UP (I- only) indicates that the elevator in the I- pit is not all the way down. The H- elevator is portable and is not interlocked.

GRNDSTICK UP (groundstick up) indicates that the groundstick in the pit is not stored in its proper place. For the I- system this is across the lower pit door entrance. For H- it is across the bottom of the pit stairway.

SAFETY SYS. FAILURE indicates that the linac safety system is down and that the *beam stop* in the downstream 750 keV transport line has not closed (OPBULL 717) (a *critical device failure*). The Haefelys for both H- and I- systems are then automatically shut down to prevent beam from leaving the preaccelerators.

There are also interlocked keys for each system (two for I-, three for H-) that open the appropriate pit doors. These keys must be in their slots and turned clockwise in order for the READY sum to be made up.

The procedure to access the I- (H-) dome (OPBULL 486) is as follows: turn off the reference source and the high voltage power supply. Pull one of the keys on the lower panel (not the key on the upper panel!) and use it to open the lower (north) pit door. Across the doorway (across the

bottom of the stairs) is a groundstick. Use it to ground the HV transformer and the multiplying stack, working from the bottom up. Ground the top of the multiplying stack and the dome. Hang the groundstick from the top of the multiplying stack. A second groundstick may be hung from the dome. Raise the elevator to the up position. Back in the preacc control room, take a second key from the lower panel and the key to the dome, which is hanging on the Haefely control rack. Use the key from the lower panel to open the upper (south) pit door.

To leave the dome, close the dome door and upper (south) pit door. Go back through the lower (north) pit door, and lower the elevator all the way (the H- elevator isn't interlocked, but the door to the storage room is- make sure it is closed). Remove the ground sticks and place the one across the entrance back in its holder, making sure that it makes contact with both microswitches. Close the lower (north) door and return the keys to the lower panel in the Haefely control rack. Turn on the HVPS, and finally, the reference source.

If the Haefely won't maintain full voltage, check the current being drawn by the supply (normally 1-3 mA) and the conductivity in the water system for the water resistors (sec 10.1) If the conductivity is poor (greater than 1.1 μmho/cm) , the Haefely will draw more current and may trip off before it reaches full voltage.

Of course, it is a good idea to check the pit itself in these situations, to check for major component failures or water leaks.

1.3 Sources

The ion sources are the direct-extraction *magnetron* type, conceived at Novosibirsk around 1972 and developed at Brookhaven and FNAL for use in particle accelerators. The first operational use of the magnetron negative-ion source at FNAL was in 1978. Magnetrons have supplanted the charge-exchange *duoplasmatron* type source which produced protons and is still encountered in older documentation.

The magnetron H- source (OPBULL 600, 953) produces short pulses of negative ions at the linac repetition rate of 15 Hz. These ions are created in a *plasma* formed near a metal surface. A pulsed valve introduces hydrogen gas at low pressure into the volume between two molybdenum electrodes: a matchbox-sized, oval-shaped cathode and a surrounding anode, separated by 1 mm and held in place by a glass ceramic insulator. An external magnet provides a 1-1.5 kG magnetic field parallel to the cathode surface. A low-impedance pulse forming network strikes an 80 μsec, 40 amp arc between the electrodes. Electrons in the arc, spiraling about the magnetic field lines, efficiently ionize the gas to form a dense plasma of H+ ions and electrons in the gap.

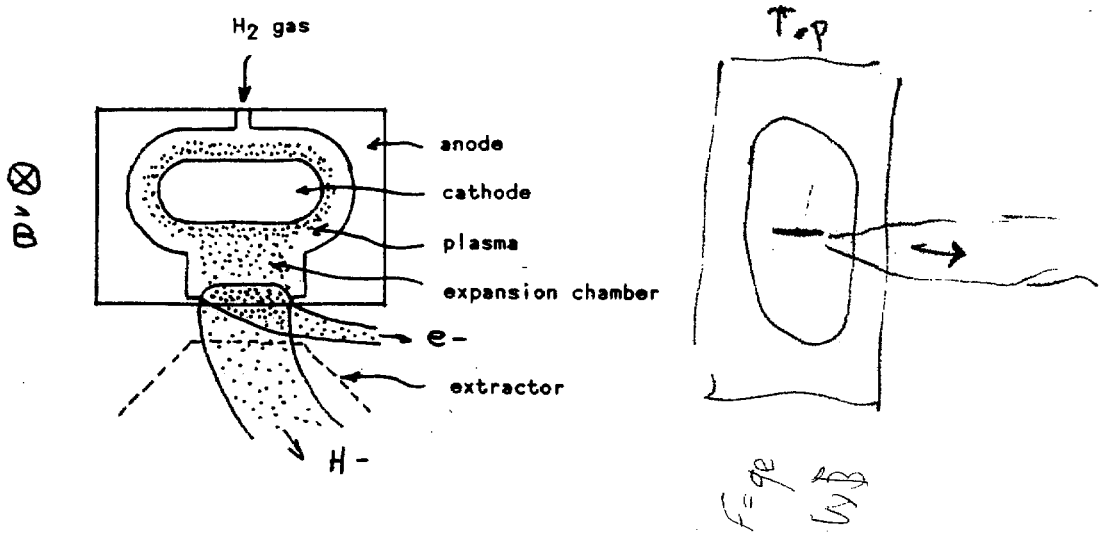

figure 1.6: magnetron negative-ion source

H+ ions strike the cathode and occasionally pick up two electrons or "sputter" H- ions from the surface. H- ions are repelled from the cathode and charge-exchange with neutral hydrogen atoms at the plasma boundary to produce H- ions with a smaller energy spread. A pulsed electrostatic *extractor* then accelerates the negative ions out of the source.

The production of negative ions by the cathode is enhanced by introducing cesium vapor into the source, which coats the electrodes and lowers the surface *work function*. Cesium vapor is supplied by vaporizing solid cesium in an electrically-heated *cesium boiler*. The vapor then travels through a heated tube to the source. Five grams of cesium is enough for about a year of source operation.

Extremely pure hydrogen gas at 10-30 PSIG is supplied by a 30 ft^3 gas bottle located inside the dome, which is enough for about six months of source operation. Gas pressure in the source is controlled by a *piezoelectric crystal* valve. When a voltage pulse is applied to the crystal, it bends, admitting gas to the source. A second DC supply on the crystal is used to compensate for temperature changes which affect the operating point of the valve. Source gas pressure is regulated by modulating the width of the voltage pulse that opens the valve. This task is handled by a servo loop residing in computer software that acts to keep the pressure near the set point chosen by the operator.

1.4 Extractor and Magnet

A 1 x 10 mm aperture in the source body allows negative ions and electrons to exit the source when an electrostatic

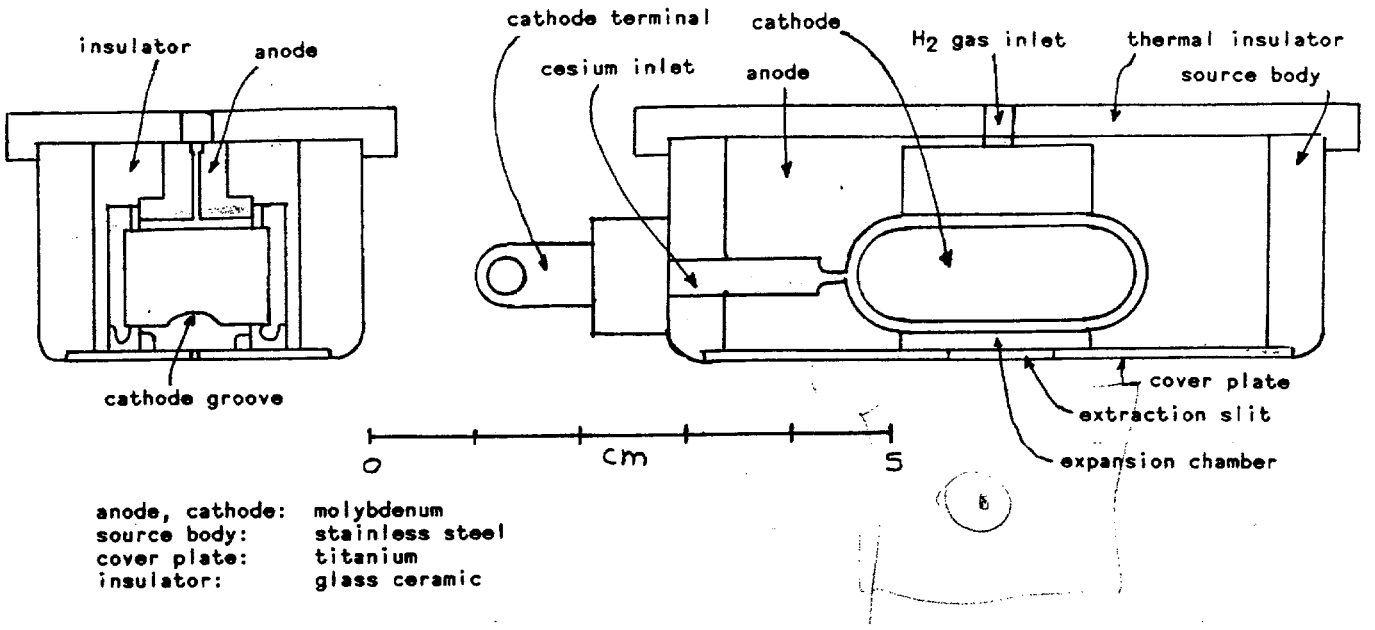

figure 1.7: FNAL magnetron ion source

extractor, 2 mm below the aperture, is pulsed to about 18 kV (fig. 1.8).

The high density (1 A/cm^2) beam exiting the source has a high *divergence* due to *space charge forces* and the defocusing effect of the extractor. To control this, a high-gradient 90° bending and focusing magnet reduces beam divergence from 250 mrad to about 37 mrad. The pole faces of this magnet are slanted to produce a quadrupole field and focus the beam in both planes. Pole-tip extensions on the top straddle the source and provide the magnetic field necessary to sustain the plasma. Extracted electrons are separated from the H- beam by the magnetic field. The pole pieces, cooled to -30° C by a Freon refrigerator located in the dome (fig. 1.9), also capture wayward cesium atoms that are extracted from the source and could cause sparking in the *accelerating column* if not removed. The ion beam leaving the 90° bending magnet is about 50 mA and 1.5 x 2 cm in size.

Sixty percent of the gas which flows through the source is drawn off by a 400 liter/sec *turbomolecular pump* located in the dome. Source pressure is actually measured in the vacuum line to this pump, which may be isolated by a valve, but is normally left open. The valve is operated by nitrogen gas supplied by a tube leading from the outside world. The valve is manually controlled. The hydrogen gas not removed by the turbo flows through the accelerating column and is removed by a 2400 liter/sec *ion pump* (powered by four separate supplies) located outside the preaccelerator pit.

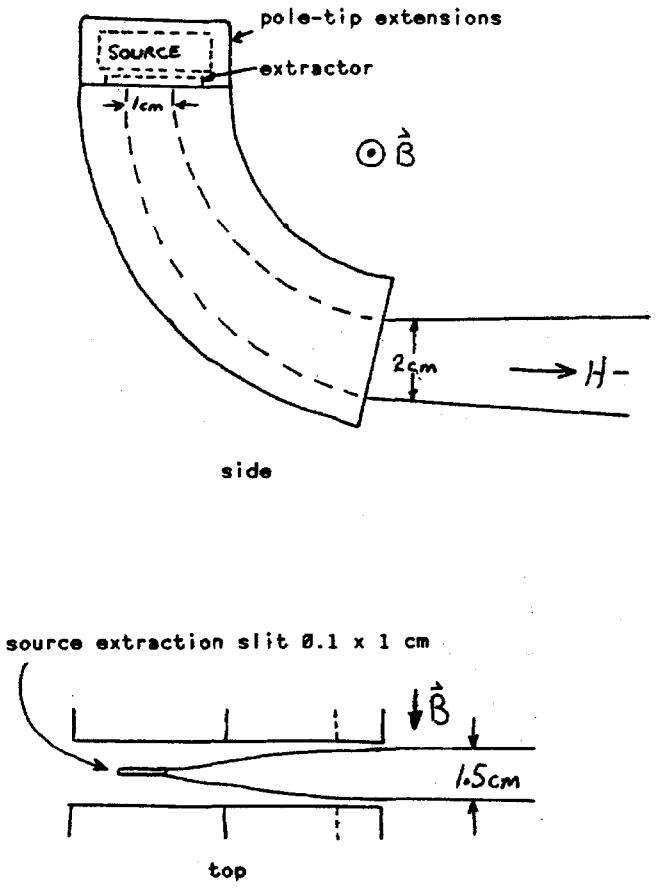

figure 1.8: extractor and magnet

All the hardware necessary to run the source is contained in the dome, which is actually a hollow aluminum cube with rounded corners. Inside are the source assembly, hydrogen gas supply, gas valve pulser, arc supply and pulser, source heater, cesium boiler power supply, cesium tube and valve heaters, extractor power supply and pulser, magnet power supply, magnet pole refrigerator, *ion gauges* for measuring vacuum, *roughing* and turbo vacuum pumps, turbo pump controller, Freon cooling system for turbo pump and magnet coil, generator and breaker panel, oscilloscope and TV cameras, and control microprocessor.

Communication with the control microprocessor in the dome is done by way of fiber optic cables run from the preacc control room (sec. 12.2). The same is true of clock signals (sec. 3.3) and the TV camera video. The control and clock cables are blue, and the video cables are orange or red.

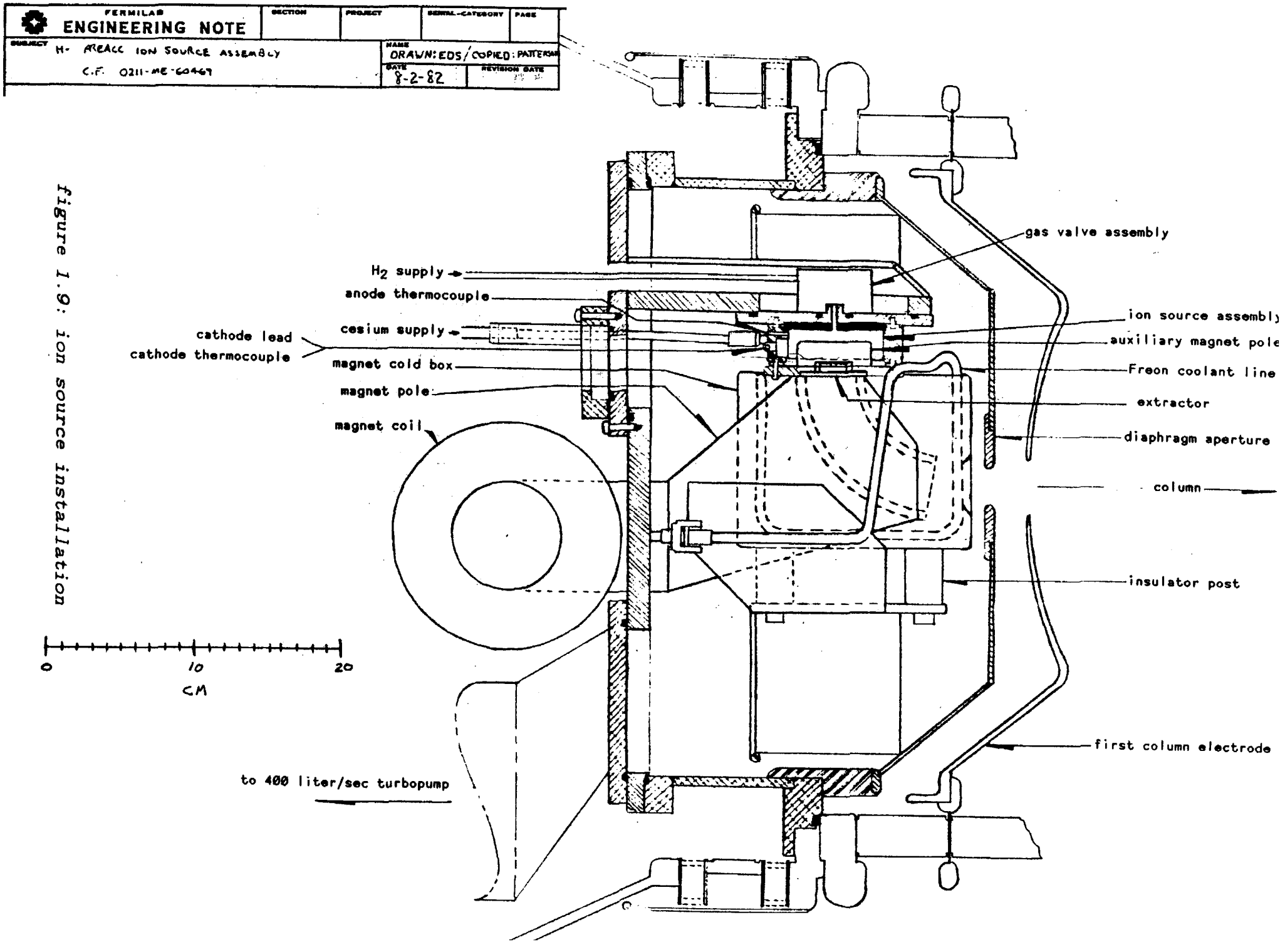

figure 1.9: ion source installation

1.5 Column

Five centimeters from the exit edge of the bending magnet the beam enters the accelerating column (fig. 1.10). The column consists of seven perforated, disk-shaped titanium electrodes that are designed to guide the ion beam during its acceleration to ground potential. Titanium was chosen by virtue of its high work function, to reduce the number of stray electrons in the column. Ceramic rings insulate the electrodes from the outside world and one another. Two *water resistors* passing from the dome through the outer edges of rings (connected to the electrode disks via rods) to the pit wall maintain roughly equal potential differences between the disks. The distance between the electrodes is small compared to their radius for good field quality on the axis, and to reduce defocusing effects of any charge picked up by the insulating rings. Holes near the outer edge of the electrodes ease the task of vacuum pumping. A set of these electrodes may be seen on the west side of the second floor of the central laboratory.

The column is encased in a spun glass pressure vessel containing sulphur hexafloride gas at two atmospheres' pressure. This gas is a good insulator and acts to reduce the possibility of the column leads arcing to each other or ground. *Spark gaps* at the outer edge of the electrode rings protect the column by handling most of the current as a result of a spark or bad voltage distribution. Vacuum in the column is maintained by the 2400 liter/sec Ultek ion pump located outside the pit.

1.6 Source Operation

Figure 1.11 is a linac parameter page used to monitor and control operation of the sources. This particular page represents a healthy seven-month old source in the H- preaccelerator; thus all parameter names start with "H". Identical parameters for the I- source start with "I".

The source gas pressure and the source temperature are vital to proper operation. The cathode optimally runs at a temperature of about 400° C, with an cesium coating of 0.6 of a monolayer. If the temperature is too low, cesium tends to condense on the electrodes. Too high a temperature results in an insufficient coating of cesium on the cathode, and in extreme cases may damage the piezoelectric gas valve. Cathode temperature L:HCTEMP is controlled by varying the current in a resistive heater in the source body (controlled manually by a Variac in the dome). The source body temperature itself, L:HSTEMP, is quite a bit cooler than the cathode; the difference is due to heating of the cathode by the arc. The arc pulse width L:HTAW is thus another control of the cathode temperature, although it is not the preferred knob.

Gas pressure affects both the quality of the arc and ion production rates. Too low a pressure results in an unstable arc. Increasing the pressure (by raising the servo loop setpoint L:HPRES) stabilizes the arc, but may reduce beam

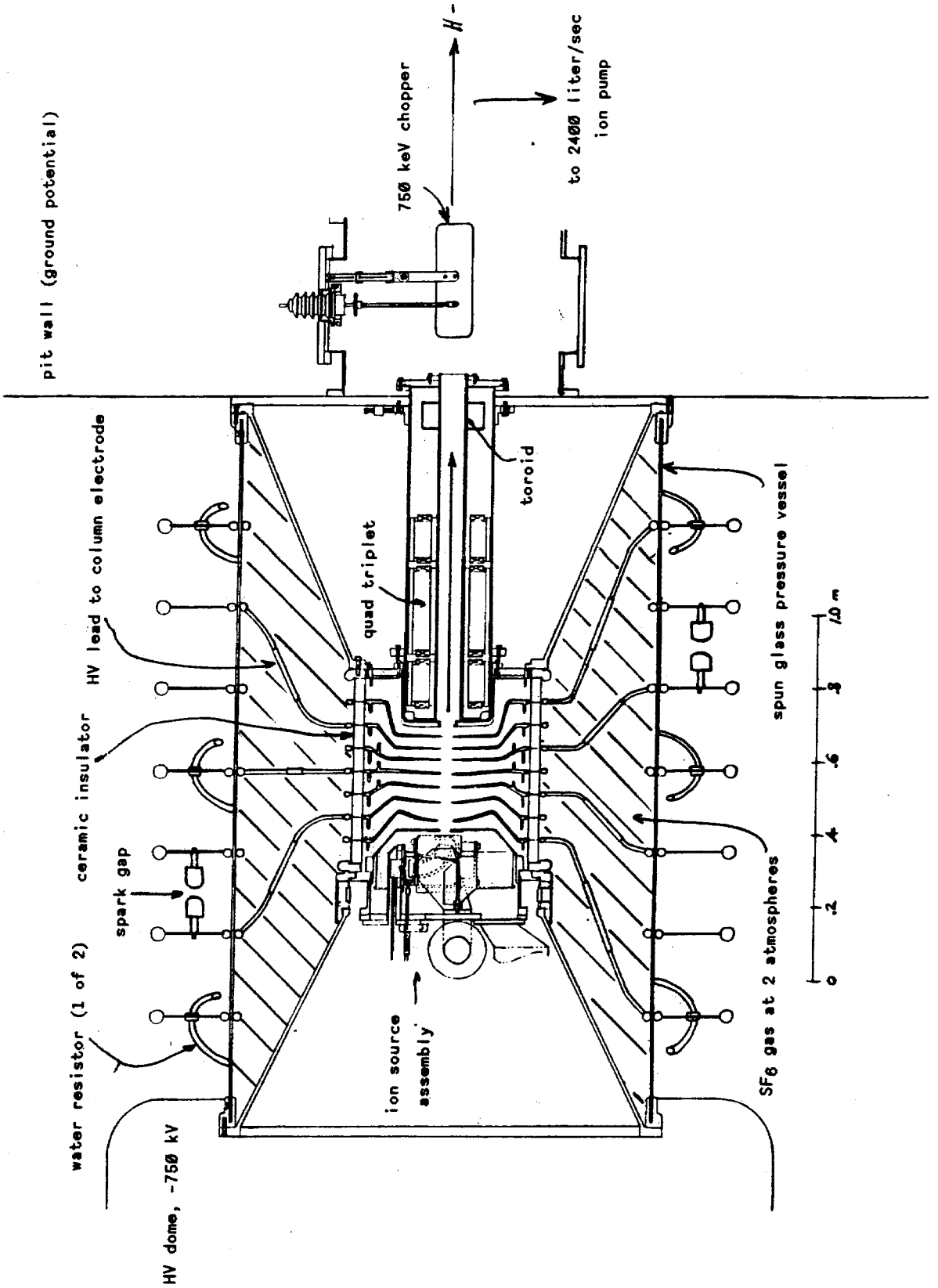

figure 1.10: ion source and accelerating column

```
                                WED  06-NOV-85  09:57

L57  H- SOURCE PARAMETERS..........SET  .  D/A       A/D      *COPIES*
-<FTP>+ *SS* X-A/D  X=TIME      Y=MIMKS01 ;M TOR109;M BOS    ;
*Save   .--. Eng-U  I= 0        I=-10     ;-.2      ;-10      ;-10
-< 1>+  r_MR AUTO   F= 60       F= 80     ; .2      ; 10      ; 10
SURVEY  750 kev timers  misc    750 2   ....... ....... .......
-L:HHVOLT*.1   H- HIGH VOLTAGE                <     >  -745.1   KV
-L:HARCSV*.1   H- ARC SUPPLY VLTS              277.2    282.4   V
-L:HMAGI*.1    H- MAGNET CURRENT              -7.557    7.568   A
-L:HEXTV*.1    H- EXTRACTION VLTS              18.18    18.04   KV
 L:HEXTI       H- EXTRACTOR CURR                       -2.734   MA
-L:HGASV*.1    H- GAS PULSED VLTS              141.2    136.1   V
-L:HGASO*.1    H- GAS OFFSET VLTS             -.198    -.049    V
-L:HTGW*.01    H- GAS PULSE WIDTH              199      199     US.
-L:HTGON*.1    H- GAS VALVE ON                 700      700     US.
-L:HPRES*.1    H- SRC PRES    MAN AUT          19.69    19.58   UT
 L:HARCI       H- ARC CURRENT                          -37.6    A
 L:HARCV       H- ARC VOLTAGE                          -152.3   V
-L:HTAW        H- ARC PULSE WIDTH              83       83      US.
 L:HCTEMP      H- CATHODE TEMP                          410.5   DEG
 L:HSTEMP      H- SOURCE TEMP                           366     DEG
 L:HBTEMP      H- CS BOILER TEMP                        115.4   DEG
-L:HBOILV      H- CESIUM BOILER               -8.887    50      V
 L:HVACV       H- H VACUUM VALUE                        1.028   TOR
 L:HVACE       H- H VACUUM EXP                          6.078
 L:HTOR4       H- TOROID #4                            *-52.56  MA
-L:HSPTHR      H- SRC PR THRESH                .198     .198    UT
-L:HSPWIN      H- SRC PR WINDOW                20       20      UT
-L:HCPR        H- COARSE PR REG                5        5       US
 L:HMAINV      H- MAINS VOLTAGE                         117.2   V
 L:HMAINI      H- MAINS CURRENT                         19.57   A
 L:HCHV        H- H CHOPPER HV                          19.55   KV
 L:HCHI        H- H CHOPPER CURR                        2.419   MA
 L:HTOR4       H- TOROID #4                            *-52.21  MA
 L:HTOR5       H- TOROID #5                            *-53.45  MA
 L:HTOR6       H- TOROID #6                            * 55.69  MA
 L:HTOR7       H- TOROID #7                            *-53.63  MA
 L:HTOR8       H- TOROID #8                            * .256   MA
 L:HTOR9       H- TOROID #9                            * 1.312  MA
-L:H1ST        H- FIRST ELECTRODE              0        27.03   KV

 L:PTEMP       PREACC AIR TEMP                          75.45   DEG
 L:HDTEMP      H DOME TEMP                             * 84.3   DEG
 L:IDTEMP      I- DOME TEMP                            * 76.07  DEG
```

figure 1.11: ion source parameters

current by stripping the H- ions in the source as the ions collide with gas molecules. High source pressure also increases the load on the ion pump and can induce sparking in the extractor. Nominal source pressure is about 28 μtorr.

Source pressure is regulated by a servo loop (OPBULL 671) which samples the pressure in the vacuum line to the turbo at 15 Hz. Fifteen samples are made, followed by one correction, resulting in an adjustment to the gas pulse width L:HTGW about once a second. If the source pressure is outside the window formed by L:HSPWIN and L:HPRES, no correction will be made and operator intervention may be necessary. To guard against pressure bursts, another algorithm (OPBULL 917) reduces the gas pulse width L:HTGW by a number of μsec (L:HCPR) every second that the source pressure is more than sum of L:HPRES and L:HSPWIN (the upper limit of the window). The deadband of the loop is set by L:HSPTHR, the source pressure threshold.

During startup or recovery from "loss" of a source, the cathode must be brought to the correct temperature and have a sufficient coating of cesium before reasonable ion

production can be expected. Once the cesium boiler and cesium transfer line heaters have been turned on, the source can be started up after 1-2 hours. In the "old days", it was advised to raise the source pressure, increase the arc pulse length, and raise the magnet current to speed up heating of the cathode; more recent experience has shown that equally good results can be obtained by simply setting all parameters to nominal operating values and waiting. Stubborn sources may benefit by temporarily raising the source pressure to 40 μtorr or so. Arc voltage will initially be high and arc current low as the cathode warms up and aquires cesium. As the arc improves it is possible to slowly decrease the source pressure. Good output current (L:HTOR4 for H-, and L:ITOR1 for I-) should be seen within an hour of good arc operation. In any event, the nominal source values should not be changed without good reason and a note in the logbook.

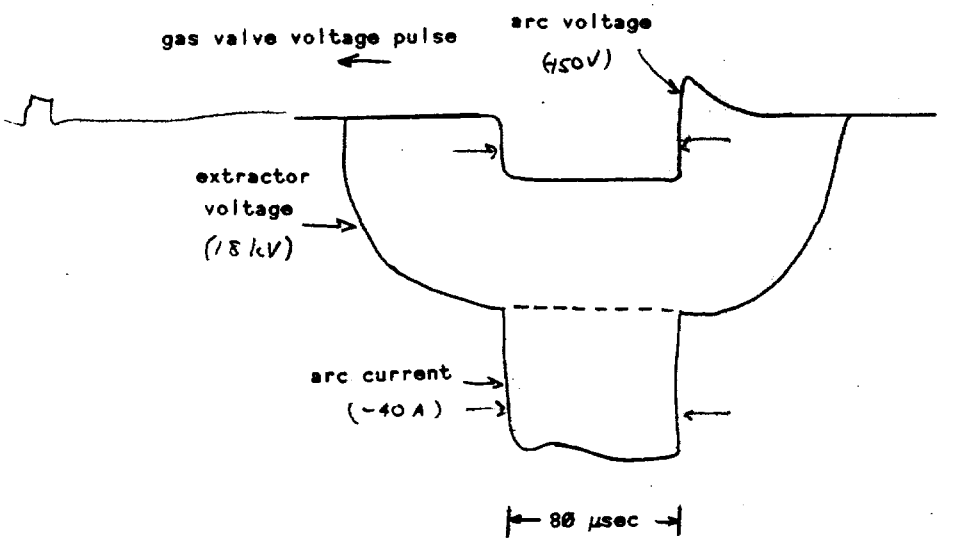

figure 1.12: ion source scope traces

Figure 1.12 shows a familiar oscilloscope trace that shows source operation at a glance. This trace is sent from a TV camera in the dome via the light link. The upper trace is the sum of the arc voltage and gas valve voltage pulse. (The gas valve voltage pulse occurs much earlier than the arc voltage pulse, so it is necessary to adjust the scope trigger time L:ITSCOP or L:HTSCOP earlier to see it.) The time at which the source parameters are sampled is visible as a glitch on the upper trace. The lower trace is the sum of the extractor voltage (upper dip) and the arc current (lower dip). If the extractor is arcing, the lower trace will jump around considerably. If turning down the source pressure doesn't cure the problem, it may be necessary to reduce the extractor voltage. Be forewarned that the extractor voltage and magnet current both affect the

steering of the beam through the column, as well as the rest of the linac. Do not change nominal values without consulting specialists.

Source lifetimes vary from source to source for not always well understood reasons. The longest-lived source observed at FNAL so far (11/85) is running well at seven months. After a time the output of a source will start to decrease, usually visible as a pronounced slope in the arc current trace. It must then be removed and cleaned of cesium hydride and other sputtered deposits (molybdenum, etc.).

For a temporary shutdown of a source, first shut off the cesium boiler and transfer line heaters, shut off the source body heater (sometimes called the anode heater) and close the cesium supply valve (located in the dome). Wait two hours, then shut off the magnet and arc supplies. Wait another two hours, then turn off the H_2 gas supply.

A permanent source shutdown is much simpler: just turn off everything except the gas supply until the source cools, and then turn off the gas as well.

Spares for the supplies that power the source heaters, magnet, and arc supplies are found in the preacc control room.

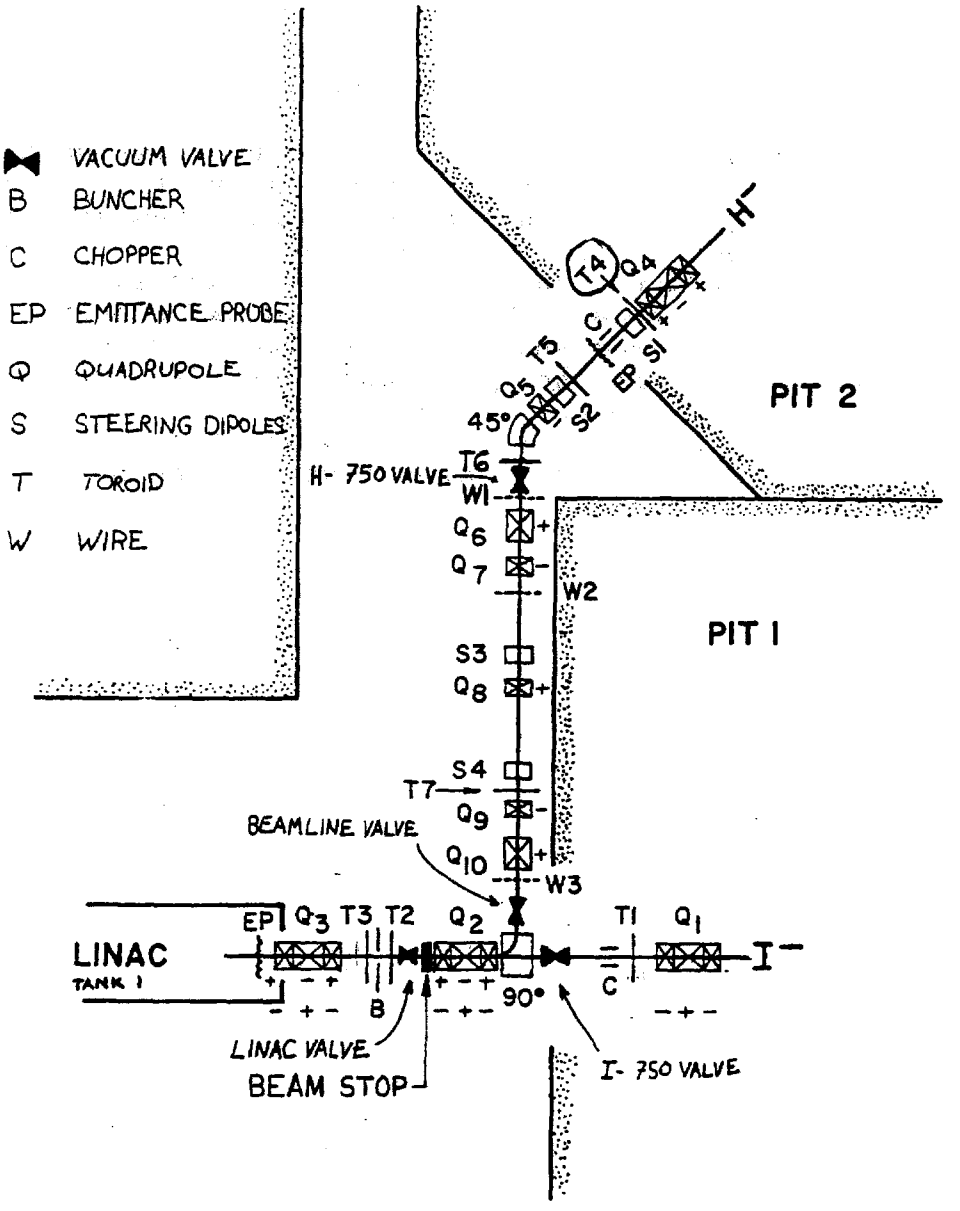

figure 2.1: 750 keV transport line layout

2 750 keV TRANSPORT LINE

Each preaccelerator has its own transport line up to a point where the lines merge and continue on to the linac. The I- transport line is the simpler and shorter of the two, as seen in figure 2.1. Once the beam pulse has left the column it passes through a quadrupole triplet Q1, which focuses the beam in both planes. The end elements share a power supply L:IQTM1E, and the center element has its own supply L:IQTM1C. The beam current then is measured by a toroid T1 (L:ITOR1).

The beam then passes through an electrostatic *chopper* which is used to select a short portion of the beam pulse to be sent to the linac. The unwanted beam is deflected into a carbon disk, while the selected beam (the "chop") passes through undeflected. The 750 keV chopper is described in greater detail in sec. 2.1.

The selected beam chop (40 μS or so for High-Energy Physics (HEP)) then passes through a 90-degree bending magnet which is off for I- operation; the beam travels a straight path through a second quadrupole triplet Q2 (power supplies L:QTM2C and L:QTM2E), the buncher (sec. 6), toroids T2 and T3 (L:IHTOR2 and L:IHTOR3), and a third quadrupole triplet Q3 (power supplies L:QTM3C and L:QTM3C2 for the center element, and L:QTM3E for the end elements).

An *emittance probe* (FN 201, EXP 111) then leads to tank one of the linac. This device (fig. 2.2) measures the angular divergence of the beam by stepping a 0.075 mm slit across the beam and recording the width of the image formed on a pickup plate 10 cm away. The pickup plate is divided into 20 segments on 0.2 mm centers. Each segment thus corresponds to 2 milliradians angular divergence. The stepping motion of the slit and the recording and analyzing of the data are done by computer. This is a destructive measurement and is done only under special conditions.

The H- transport line is a bit more involved. The first element is a quadrupole triplet Q4 which is unique in that it is possible to control all three elements individually (L:HQTM4U, L:HQTM4C, L:HQTM4D), although (4U) usually runs at a fixed value. Toroid T4 (L:HTOR4) measures the beam coming out of the column, and is followed by a vertical dipole trim S1 (L:HVT1). Then come the H- chopper, an emittance probe, toroid T5 (L:HTOR5), horizontal and vertical dipole trims S2 (L:HHT2, L:HVT2), and a single quadrupole Q5 (L:HQ5).

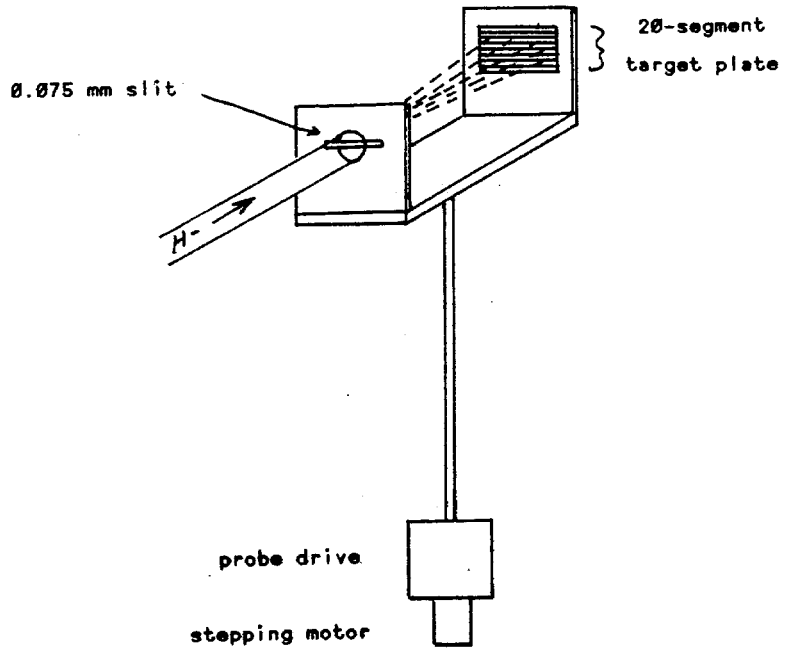

figure 2.2: emittance probe

The next element is a 45° bending magnet which is run in series with the 90° magnet mentioned earlier. These magnets have a bulk supply L:HBENDS and the 90° also has a trim L:TRIM90. A gaussmeter in the aperture of the magnet measures the magnetic field, but is not used for regulation or tuning. L:HBENDS is off for I- operation, and the beam extracted from the H- source at that time is then sent straight through the 45° bending magnet to a carbon block.

Under very special conditions (which have not occurred in the last five years) it may be desirable to run the 45° magnet without the 90°, so as to run H- source beam straight through the 90° magnet. To do this, it is necessary to remove the 90° magnet from the circuit by rotating two rhomboidal plates located on the wall below Q9 in the H- 750 line. In normal operation, both magnets are left in the

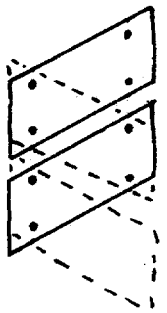

figure 2.3: 45°-90° lead switching

circuit, and the supply L:HBENDS is turned on or off depending on whether H- or I- beam is to be used (sec. 2.2).

Next in the line is toroid T6 (HTOR6), a beam profile monitor W1, and a number of single quadrupoles Q6-10. Q6 and Q10 are in series, as are Q7 and Q9. Proper operation of the line requires a specific relation between the current in Q7 and Q9 and the currents in Q8, Q6 and Q10 (see below).

S3 and S4 are dipole trim packages (L:HHT3, L:HVT3, and L:HHT4, L:HVT4).

W2 and W3 are more beam profile monitors. The three monitors W1-3 are manually controlled from the preacc control room and were used for the initial tuneup of the line; they haven't been used for several years.

Toroid T7 (L:HTOR7) is used for rough tunes of the H- transport line. (Older documentation will also show toroids T8 and T9, but these are no longer in place.)

The beam from the H- source is then bent 90° to travel through Q2 and on to the linac, as would the beam from the I- source.

All the quadrupole power supplies are Sorenson SCR20-250s (OPBULL 577) except L:QTM3E. All power supplies for the above quads and dipoles are in the preacc control room, except for the two large EMHP supplies. One of these (below the stairs leading from the upper gallery to the preacc control room) powers the 45°-90° bending magnets, and the other, which powers L:QTM3E, is in the lower linac gallery near the water system for RF station 1. Any of the above supplies will trip off if there is insufficient water flow for their loads.

There are four vacuum valves in the 750 keV transport lines (fig. 2.1 again); two are interlocked and two are controlled manually. The status and control of these valves are handled by the *gate valve controller* located in the preaccelerator control room (OPBULL 720). The H- and I- valves are interlocked to the vacuum systems; both valves will close if either linac vacuum (monitored by looking at the ion pump power supplies and vacuum in tank one) or H- 750 keV transport line vacuum (monitored by a thermocouple in the transport line) goes bad. If the vacuum in either column goes bad (monitored by ion gauges) the valve for that system will close. These valves can also be closed manually from the gate valve controller. If the H- valve closes, the 45°-90° supply L:HBENDS will trip off to keep beam from hitting the valve. The I- valve has a carbon block attached to its upstream face to protect it from beam if it closes.

The H- valve and the Beamline valve should not be closed at the same time. There are no vacuum pumps in the transport line between these valves, and the line cannot be pumped if both valves are closed.

The Beamline valve and the Linac valve are manually controlled from the gate valve controller. The Linac valve is also interlocked to the tank one vacuum pumps and will close if both pumps trip.

Between the quadrupole triplet Q2 and the Linac vacuum valve is the linac safety system *primary critical device*: the beam stop. The beam stop is a block of metal that will

drop into the beam path if the linac safety system drops (to protect personnel), or if the pulse shifter (sec. 3.3) fails to inhibit beam when it should. The block is pneumatically controlled, but should drop in the event of a power failure or loss of gas pressure. If the beam stop is commanded to close and does not, both the H- and I- Haefely power supplies will trip off.

2.1 750 keV Chopper

The amount of beam that is allowed to pass from the source to the linac is determined by the chopper (OPBULL 210), consisting of a pair of conducting plates that straddle the beam path (fig. 2.4). An initial potential difference (a) between the plates causes the beam to be bent off to one side and be lost in a carbon disk. The plates are then brought to the same potential for a controlled period of time (b), which allows the beam to pass through undeflected. The potential difference then returns, and the beam is bent again (c).

The duration of the selected beam pulse (the "chop") varies depending on the use to which the beam pulse will be put: HEP, P-bar (antiproton) production (taking the place of the old cooling ring chop), neutron therapy (NTF, or the old designation CTF), or standby (the do-nothing chop).

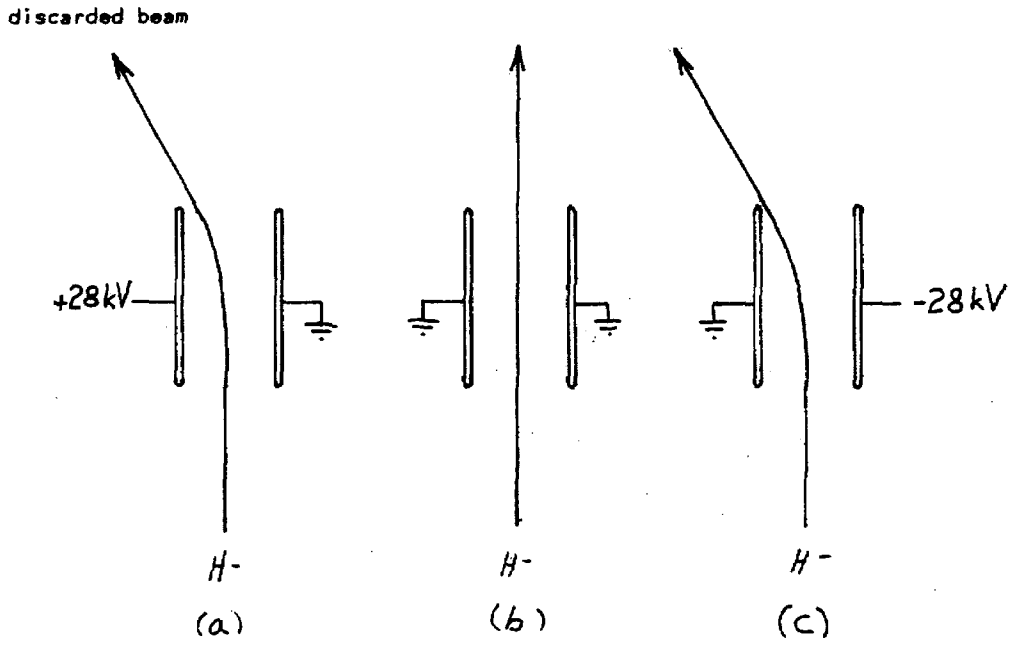

figure 2.4: 750 keV chopper operation

The 750 keV chopper power supply (fig. 2.5) consists of two thyratrons connected through a 4 MΩ resistor to a common anode supply that runs at about 28 kV. One thyratron (the *on tube*) has its anode connected through 90 Ω to one of the plates. The other thyratron (the *off tube*) has its anode coupled to the second plate through 90 Ω and a series

capacitor. The second plate is also connected to ground through a 100 kΩ resistor. Initially, then, the first plate is at 28 kV and the second plate is at ground. Incoming beam is deflected by the electric field between the plates. When the "on" tube fires, the tube anode (and thus the first plate) is grounded. With both plates at ground, extracted beam from the column passes through the plates unperturbed. When the "off" tube fires, the series capacitor, which initially had one side at ground and the other at 28 kV, suddenly has the high-potential side clamped to ground. The voltage change (the AC component) is coupled across the capacitor, bringing the second plate to -28 kV; the extracted beam is again deflected into the carbon disk. The second plate then charges back up to ground (relatively slowly) through the 100 kΩ resistor. Likewise, the first plate charges up to 28 kV through the 4 MΩ resistor leading to the anode supply. Note that the 80 μS beam pulse (determined by the arc pulse width) ends long before the plates return to their initial conditions.

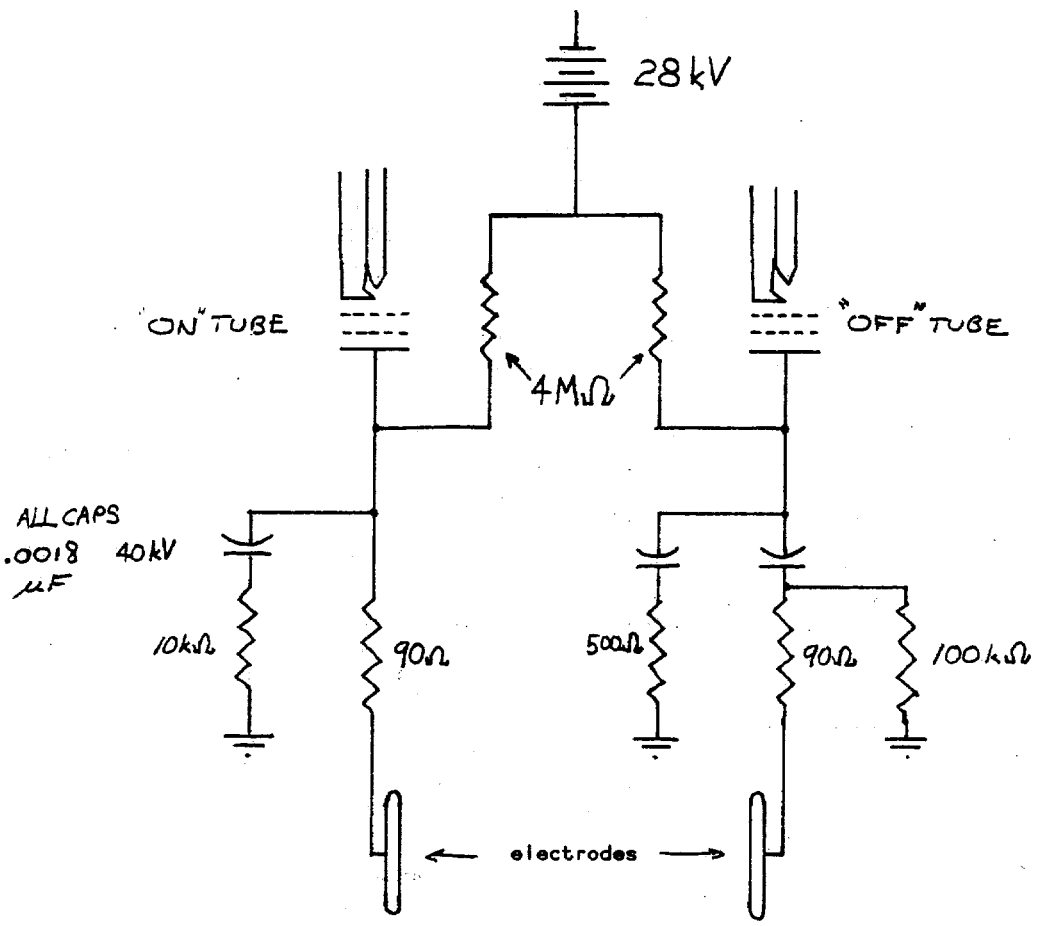

figure 2.5: 750 keV chopper circuitry

The chopper on and off times are determined by *predets* in the preacc control room; there are on and off times for each of the four types of chop. Which pair of chop times is actually used for a given pulse is determined by a module in the preacc control room (sec. 3.2). The same times are sent to both H- and I- choppers, and both normally run all the time.

The chopper power supply will trip off if the ion gauge that measures the column vacuum trips off. The power supply will then require a local reset. The H- and I- chopper supplies are located in the upper linac gallery by RF station 1.

2.2 750 keV Transport Line Operation

Tuning the I- 750 keV line is a matter of tuning the horizontal trim L:TRIM90 and the quads for maximum transmission into (L:T01IN, the beam current into tank one) and out of (L:T09OUT, the beam current out of tank nine) the linac. Maximum intensity through both toroids may, with careful tuning, occur at the same time. *Linac steering* (sec. 8.3) should be done after each iteration. Lack of a vertical trim in the I- line may cause problems with the linac steering. The quadrupole currents may have to be "fudged" to improve the steering or beam profiles at 200 MeV. Usually the intensity peaks described while tuning the quads are broad enough to permit altering the magnet currents a bit without adversely affecting the beam intensity. Transmission of the beam through the I- 750 keV line should be almost 100%.

The H- 750 keV line is a bit more involved due to its greater length and number of components. This transport line is designed to be *achromatic*; that is, particles with different momenta that begin on the same trajectory will be on the same trajectory at the end of the line. This implies that tuning is not simply a matter of getting maximum transmission. The quads Q6-10 are an achromatic set and must have a particular current relationship if they are to remain so. A tuning guide for the 750 keV lines was published in OPBULL 628 and a graph showing the correct relationship between the current in Q7 and Q9 (independent variable) and the currents in Q8, Q6 and Q10 (dependent variable) is found there.

To tune the H- line, first find the gross tune of the bends by plotting L:HTOR7 as a function of L:HBENDS. Then fine-tune the field in the 90° magnet by plotting L:T09OUT as a function of L:TRIM90.

The first element of HQTM4, L:HQTM4U, runs flat-out and shouldn't be changed. The other two elements, L:HQTM4C and L:HQTM4D are tuned looking at L:HTOR7 and L:T09OUT, as are L:HQ5 and the pair L:HQ7Q9. The correct values of L:HQ8 and L:HQ6Q10 then depend on the setting of L:HQ7Q9, although some specialists also tune L:HQ6Q10 independently of L:HQ8. The triplets QTM2C,E and QTM3C,E are tuned looking at L:T01IN and L:T09OUT, as with I-.

All the trim dipoles in the H- 750 line are tuned looking at L:HTOR7 and L:T09OUT.

After tuning the trims do the quads again. Several iterations may be necessary to get good intensity and good steering wire profiles at the same time.

2.3 Changing Sources

As sources grow older they diminish in output; source pressure may be raised to maintain nominal arc current, but it is at best a temporary measure, since the extractor may start to spark and the beam current will likely diminish anyway, due to stripping of H- ions by gas molecules. Eventually, the source will slide off the deep end and it will be necessary to switch to the other source (if the other source is already down you have a problem).

To switch from one source to another, first establish that the magnet current, extractor voltage, Haefely voltage, and chopper voltage for the source you are switching to are at nominal values. Check the readbacks of the devices in the new source's transport line against an old listing taken when the line was in use, and make sure that the monitoring for the line is enabled. Then close the gate valve for the dying source (done from the gate valve controller in the preacc control room) and make the appropriate change in the status of L:HBENDS (off for I-, on for H-). Finally, open the gate valve for the new source and tune up the new transport line.

The FNAL 200 MeV Linac

3 TIMING AND PULSE SHIFTER

Linac operation is synchronous with the booster, which cycles at 15 Hz. The 1.00002 MHz booster clock sent to the preacc control room is phase-locked to the 60 Hz line frequency (60 x 16667) and is encoded with *phase reversals* to mark the reset events of interest to the booster (see Introduction to the Control System by Dave Johnson for a description of the clock system). The number of reversed-phase cycles of the clock denotes the type of event encoded; one cycle is a "1-gap", four cycles is a "4-gap", and so on. For the booster, a 1-gap is a "nothing" reset. A 4-gap is a *prepulse*, where the pulsed devices in the booster (as well as the 200 MeV chopper and S1) are fired to prepare them for a beam pulse. An 8-gap is a booster beam pulse. As the booster cycles at 15 Hz, one and only one type of phase reversal occurs every fifteenth of a second.

These 15 Hz pulses are used as a reference for all the timers in the linac. By slightly altering the sequence of timers, the linac can be made to run in different ways. The *pulse shifter* is the means by which linac beam is inhibited. Instead of physically blocking the beam pulse from the preaccelerators, it simply delays the timing for the preaccelerators by 1 msec so that the beam enters the linac after the RF pulse is over. The beam is scattered harmlessly in tank 1 and none is transmitted.

3.1 Timing

Refer to figure 3.1. (All modules are located in the preacc control room unless otherwise indicated.) The 1 MHz booster phase-reversal clock is sent from the phase-reversal clock generator in the MAC room (on the floor beneath the MCR) to the *clock module* in the preacc control room. This module has several functions: first, it converts all phase reversals to 1-gaps, effectively producing a 1 MHz clock with 15 Hz phase reversals laid on top. Second, it looks to see whether any phase reversals on the incoming clock are missing. If there are missing phase reversals, the module supplies them with its built-in 15 Hz generator. Finally, if the incoming clock disappears entirely, a built-in 1 MHz generator takes over, while simultaneously sending an error signal to the local microcomputer (sec. 12).

The output of the clock module is daisy-chained to service a number of predets, which produce output pulses delayed with respect to the 1-gaps ("1" on REF TIME thumbwheel on the front panel). The delay of each timer is also settable via a thumbwheel, with minimum resolution of 1 μsec. The trigger for the timers may also be a second external reference.

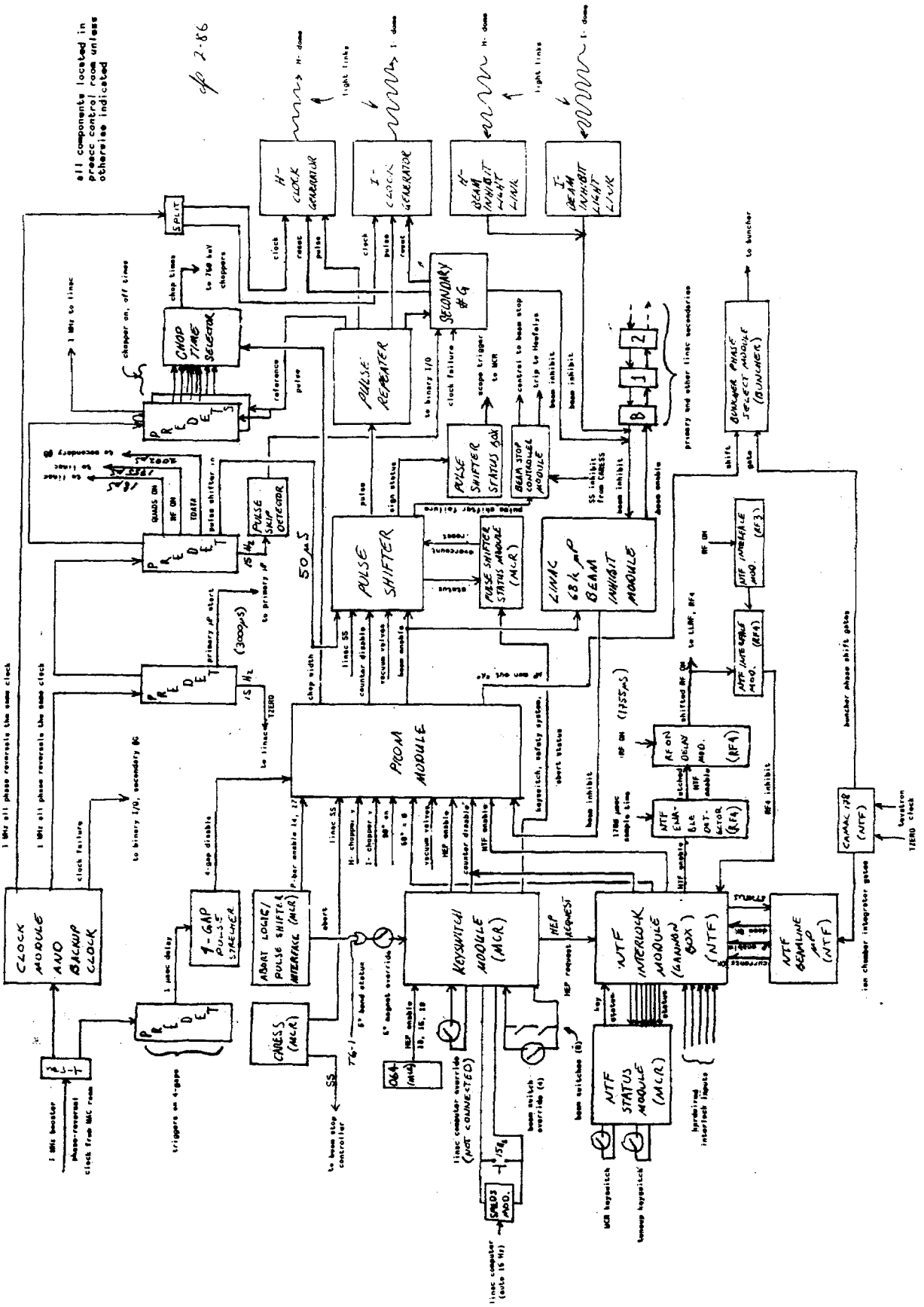

figure 3.1: linac timing/pulse control system

The PRIMARY μP START output of the first predet (delay 3000 μsec) triggers data-collecting by the linac control system (sec. 12.3). The reference time output (coincident with the 1-gap) is the TZERO pulse that informs the rest of the control system that a new cycle is starting.

The second predet has outputs QUADS ON (18 μsec), which triggers all the quadrupole power supplies in the linac cavities, RF ON (1755 μsec), which is the beginning time for the RF pulse sequences, and TDATA (2002 μsec), which is a backup trigger for the A/D converters in the linac (sec. 12). The timers TZERO, QUADS ON, and RF ON are sent from the predets to *timing pulse repeaters* by RF system 1, and then by cables down the length of the linac (QUADS ON has more repeaters at systems 6 and 8). Each system picks up the signals from the cables via 5-turn transformers.

The reference output of the second predet (again, should be 15 Hz) goes to a *pulse skip detector* which looks for missing pulses that would indicate that the booster phase-reversal clock and clock module have both failed to provide 15 Hz resets to the linac. The pulse skip detector then sends a signal to the local microcomputer, which posts the alarm 15 HZ PULSE ERROR and inhibits beam. This alarm often toggles when the booster gradient magnet power supply (GMPS) cycles on or off.

The third and fourth predets have the on and off times for the 750 keV choppers. The four chops (HEP, NTF, P-bar, and standby) can each have different times. The timers are referenced to an external input, which will be discussed shortly.

After passing through a fifth (spare) predet, the 1 MHz clock passes down the linac, as do TZERO, QUADS ON, and RF ON, but without the help of timing pulse repeaters. The 1 MHz clock is used by the microcomputer at each system to run the local timers (sec. 12.2).

3.2 Enables and Interlocks

The linac will not deliver beam unless it is asked to do so. This requires that an *enable* for a particular type of beam pulse exist. Only one type of enable is allowed per pulse. At present there are three types of enables: HEP, for injection into booster (and then on to main ring and the tevatron), P-bar, for injection into booster (and then on to main ring or the AP-4 line), and NTF, for the neutron therapy facility (sec. 11). Whether or not a particular enable eventually generates a beam pulse depends on other interlocks, generated by accelerator hardware and by switches in the MCR.

The *keyswitch module* (also known on old schematics as the pulse shifter controller module) in the MCR is the first module involved in determining whether an HEP enable will exist. An 064 timing module in the MCR generates an HEP ENABLE on tevatron clock resets 13, 15, and 19 (booster resets on the tevatron clock system). This enable will be

defeated if the status of the booster 5° bend switch (read directly from switch itself) is not in the proper position for the current mode of operation (see Basic Booster for Beginners by John Crawford) or if the *abort logic/pulse shifter interface* (OPBULL 915) indicates that the main ring or tevatron abort loops are down. If any of eight *beam switches* in the MCR are down, no enable will be generated. If the correct conditions exist, an HEP ENABLE will be passed to the to the *prom module* in the preacc control room. As long as the beam switches are up and no abort/ 5° bend fault are present, an HEP REQUEST is sent to the *NTF interlock module* (sec. 11.4, 11.5).

Beam can be produced (given the above conditions) every linac cycle (15 Hz) by pressing the 15 Hz button near the keyswitch module, or commanded by computer via the *Smeds module* next to the keyswitch module. This module is used by the automatic steering program (14.2).

The prom module also receives the NTF ENABLE from the NTF interlock module (NTF enable defers to the HEP enable if both occur simultaneously) and the P-BAR ENABLE, which the abort logic/pulse shifter module generates on tevatron clock events 14 and 17 (more tevatron clock booster resets) if the P-bar abort loop is made up. The first of two proms in the prom module (OPBULL 663) selects the chop width to be used. Note that this prom does not generate the actual widths of the chops. The inputs to the first prom are: H- chopper voltage, 90° magnet status (from a small magnetic switch on the side of the magnet), P-bar enable status, 58° magnet (NTF) status, I- chopper status, NTF enable status, and HEP enable status. The requirements for an HEP chop width are:

H- source	I- source
H- chopper on	I- chopper on
90° bend on	90° bend off
no P-bar enable	no P-bar enable
58° magnet zero	58° magnet zero
no NTF enable	no NTF enable
HEP enable	HEP enable

To get an NTF chop, the requirements are the same except the 58° magnet must be on above some value, there must be an NTF enable, and no HEP enable. A P-bar chop is the same except that there must be a P-bar enable and no HEP or NTF enables. If none of the conditions are met, the choppers default to the standby width. The logic table for the first prom is printed on the front of the module, with the inputs to the first prom as follows:

A0 H- chopper HV
A1 90° bend status
A2 P-bar enable
A3 58° magnet status
A4 I- chopper HV
A5 P-bar enable (same as A2)
A6 NTF enable
A7 HEP enable

The second prom determines whether or not the pulse shifter will shift. Its inputs are: 4-gap disable, linac safety system status, linac microprocessor inhibit, counter disable, linac vacuum valve status, and the chop widths from the first prom. If there is no 4-gap disable (see below), the linac safety system is made up, there is no microprocessor inhibit (see below), and the linac vacuum valves are all open, the pulse will be permitted to occur with the desired chop type.

The linac safety system input to the prom module comes directly from the *CARESS* racks in the MCR, and it is by means of this input that any safety system in the accelerator complex may turn off linac beam by inhibiting the pulse shifter.

The outputs of the prom module are CHOP TYPE, which is sent to the *chop time selector*, which takes the times from the third and fourth predets and send them to both 750 keV choppers. Another output, which indicates whether or not an NTF chop is selected, goes to the buncher phase select module (sec. 6) to tell it which buncher phase to select, HEP or NTF. BEAM ENABLE commands the pulse shifter to shift and to permit beam in the linac.

3.3 Pulse Shifter

The pulse shifter module provides the 15 Hz reset pulse for the sources, choppers, and the microprocessor in the preacc control room (secondary #G; sec. 12.2). The reset pulse originates in the same predet that generates the QUADS ON, RF ON, and TDATA (backup) pulses. PULSE SHIFTER IN is delayed 50 μsec from the real TZERO in order to give the pulse shifter time enough to decide whether or not to shift. This is the source of the apparent 50 μsec discrepancy between source times and other linac times.

The pulse shifter is a digital delay line (OPBULL 561) of 1 msec duration. The PULSE output of the pulse shifter (the four outputs of the *pulse repeater*) are the resets for secondary #G, the *H-* and *I- clock generators*, and the trigger pulse for the chopper time predets. When PULSE is delayed by 1 msec, the H- and I- source clocks and the secondary #G and chopper timers are delayed by the same amount. The beam is produced normally but doesn't reach the first tank in the linac until about 500 μsec after the accelerating fields have died away. When PULSE isn't shifted the beam arrives at the linac when the RF pulse is at its maximum, and is accelerated through.

The pulse shifter also counts the number of consecutive beam pulses. If the number exceeds thirteen (the number of booster batches that could be injected into main ring in the days before the tevatron- now it's twelve) the pulse shifter will inhibit itself on a PULSE OVERCOUNT (displayed and reset on the *pulse shifter status module* in the MCR). If the COUNTER DISABLE input is present, however, this feature

is overridden. COUNTER DISABLE originates in the keyswitch module (if the 15 Hz button is pressed, to allow linac tuning with 15 Hz beam going to the linac beam dump) or the NTF interlock module (if NTF is in operation, to allow uninterrupted production of neutron beam). In either case, the prom module passes it along to the pulse shifter.

If 15 Hz beam is being run to the linac dump, a danger exists. If a booster prepulse comes along on the clock (4-gap), the 200 MeV chopper and S1 (sec. 8) will fire, unintentionally sending beam to booster. It is also theoretically possible, with 15 Hz 4-gaps, to run 15 Hz beam to booster, which is somewhat reckless. To keep this from happening, a predet that looks at the "raw" 1 MHz phase-reversal clock produces a pulse whenever a 4-gap comes along. This 1 μsec pulse is fed to the *4-gap pulse strecher* which makes the pulse long enough for the second prom in the prom module to recognize. This 4-GAP DISABLE pulse will then inhibit the BEAM ENABLE pulse, making beam on 4-gaps impossible.

3.4 Beam Inhibit and Enable Links

Although the computer control system must be relied upon at some level to provide beam-inhibit protection when a critical parameter goes out of tolerance, it was decided to give all the distributed linac microprocessors a direct line to the pulse-shifter circuitry that is independent of control system links. This exists in the form of the beam inhibit line, which originates at the *linac 68k μP beam inhibit module*, which sends a two-conductor twisted pair all the way down to the far end of the linac gallery (TM 1238). One of these leads is at 12 volts and the other is at ground. All of the distributed microprocessors in the linac control system have a transistor across the leads in open-collector configuration. When the microprocessor wants to inhibit beam, it shorts the two leads together, dragging down the 12 volt line and causing the beam inhibit module to send a BEAM INHIBIT signal to the prom module, which in turn removes the BEAM ENABLE input from the pulse shifter. The cause of the inhibit is reported through the control system.

The *H-* and *I-* *beam inhibit light link modules* receive "inhibit beam" commands from the H- and I- source microprocessors through light links. These modules then clamp the beam inhibit line in the usual way.

In a similar fashion, a BEAM ENABLE from the prom module is also sent to the beam inhibit module. This puts a voltage across another twisted-pair line. With the voltage present, an LED at each microprocessor is lit to tell the μP that a beam pulse is coming. This is useful for determining the correct baselines for toroid current readbacks.

4 THE ALVAREZ STANDING-WAVE PROTON LINAC

The FNAL linac consists of nine cylindrical, electrically-resonant, water-cooled steel tanks clad inside with OFHC (Oxygen Free, High Conductivity) copper. The tanks are about 16 meters long, except for tank one, which is 7.4 meters long. Each tank is an electrically resonant RF cavity, driven by a 5 MW power amplifier which causes an electromagnetic field to oscillate at a frequency of 201.24 MHz.

4.1 Cavity Fields

The electric field vector points along the long axis of the tank, pointing in the direction of acceleration and then against it, as shown in figure 4.1. This is a simplified example, not taking into account the perturbations of the fields caused by the internal structures of the cavity.

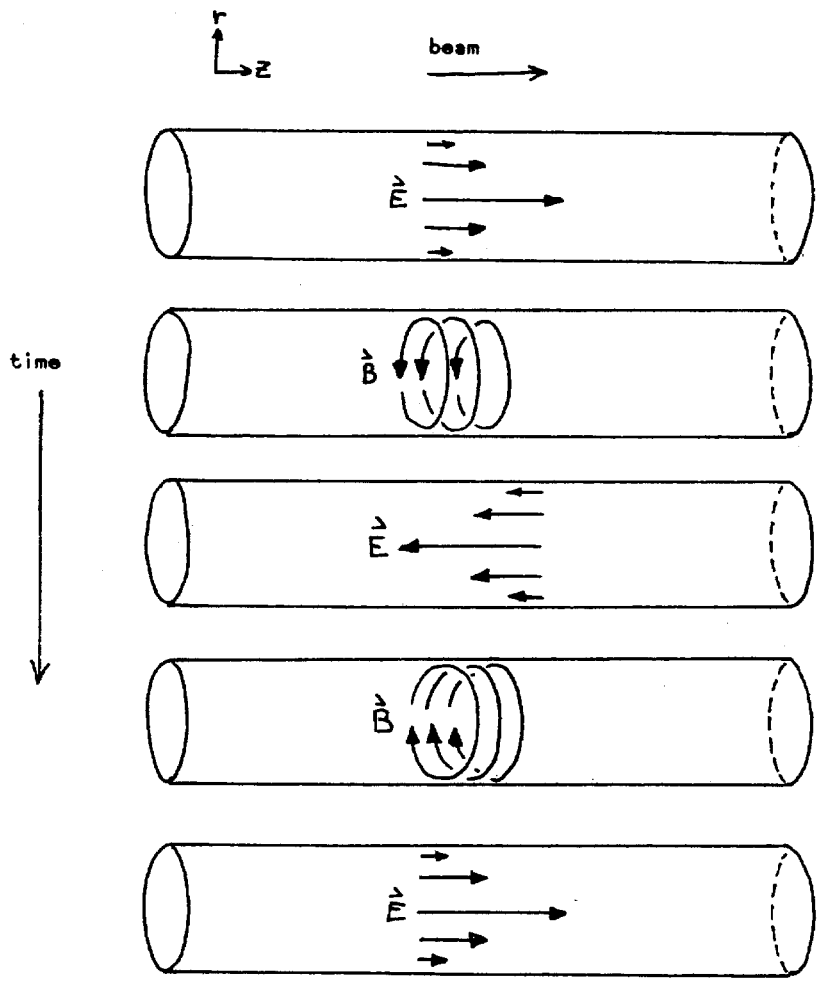

figure 4.1: linac RF cavity fields, TM_{010} mode

The magnitude of the electric field is constant along the length of the tank, except for tank 1. The field in tank 1 is designed to slope from 80% to 120% of average gradient from upstream to downstream to discourage the coupling of beam energy into the transverse directions. The magnetic field component is circumfrential in direction and is 90° in phase ahead of the electric field. Since the electromagnetic wave function Ψ is not a product of free charge in the tank, the fields satisfy Laplace's equation $\nabla^2\Psi = 0$. Writing this in cylindrical coordinates and separating variables shows the field components are of the form:

$R = J_0(lkr)$ $\quad k = 2\pi f/c$, f= RF frequency, l = an integer

$\Phi = e^{in\phi}$ $\quad n$ = an integer

$Z = \cos(m\pi z/L)$ $\quad m$ = an integer, L = length of cavity

TM_{nlm} designates a Transverse Magnetic field with the coefficients n,l,m. In this case, n = m = 0 and l = 1, so this field is known as the TM_{010} mode.

The radial variation in the electric and magnetic fields are the Bessel functions $J_0(kr)$ and $J_1(kr)$, respectively (fig. 4.2). The first zero of the electric field amplitude ($J_0(2.4048) = 0$) represents the wall of the RF cavity, because the electric field must be zero there.

$kr = 2.4048 = 2\pi fr/c$, f = cavity frequency, r = cavity radius

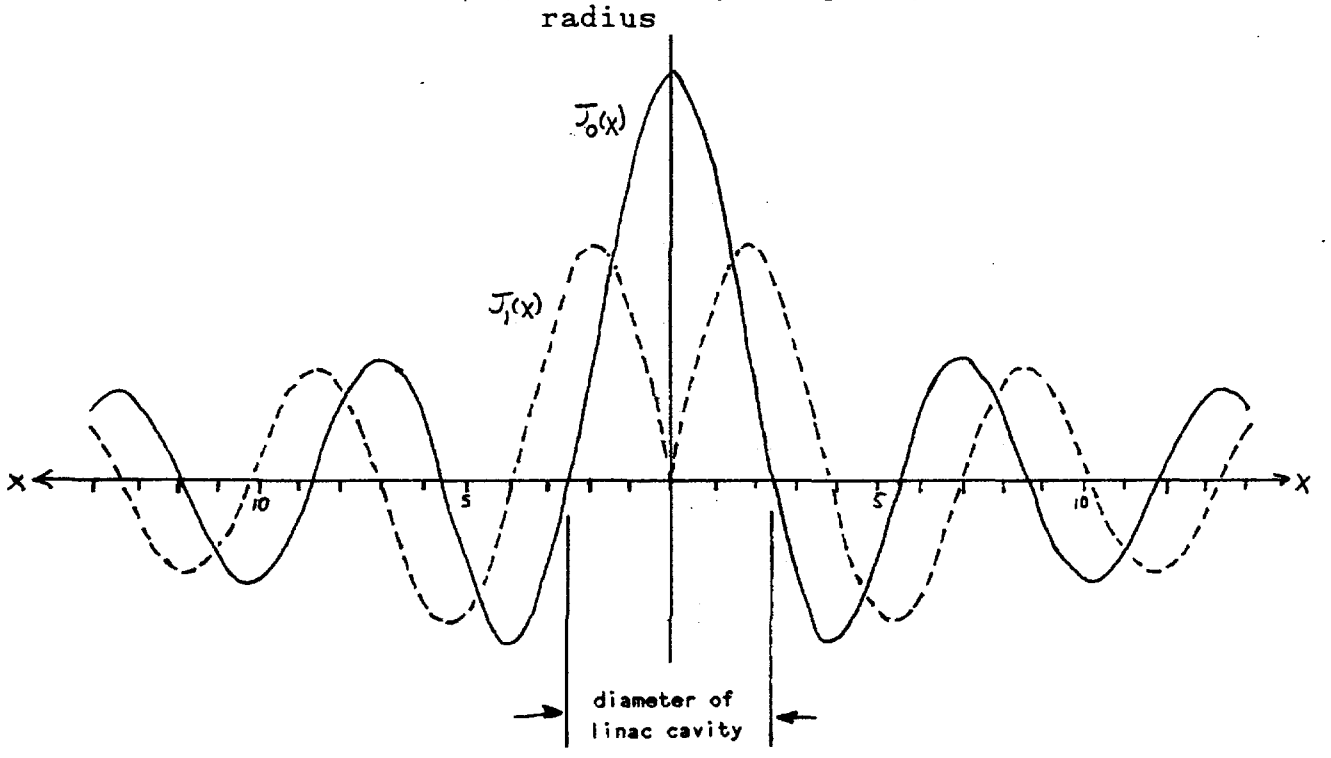

figure 4.2: Bessel functions $J_0(x)$ and $J_1(x)$

Thus for a given cavity radius, the TM_{010} mode occurs at the frequency $f = (2.4048)c/2\pi(0.44m) = 260$ MHz. The actual frequency of 201 MHz is lower due to the internal structures of the tank.

Note that the maximum of the magnetic field strength $J_1(kr)$ occurs just before the cavity wall, not at it. All the values for which $J_0(kr) = 0$ are possible wave modes in the cavity; getting the desired mode is a matter of careful design and tuning.

Tuning a cavity to resonate at the correct frequency requires a very precise control of cavity volume. A *bulk tuner* runs along the length of each cavity, resembling a "D" in cross-section (fig. 4.3). The cavity and bulk tuner are both made oversize initially, resulting in an undersized cavity volume; the tuner is then trimmed (and empty space in the cavity increased) until the correct frequency is approximated. Fine control is supplied by a series of copper

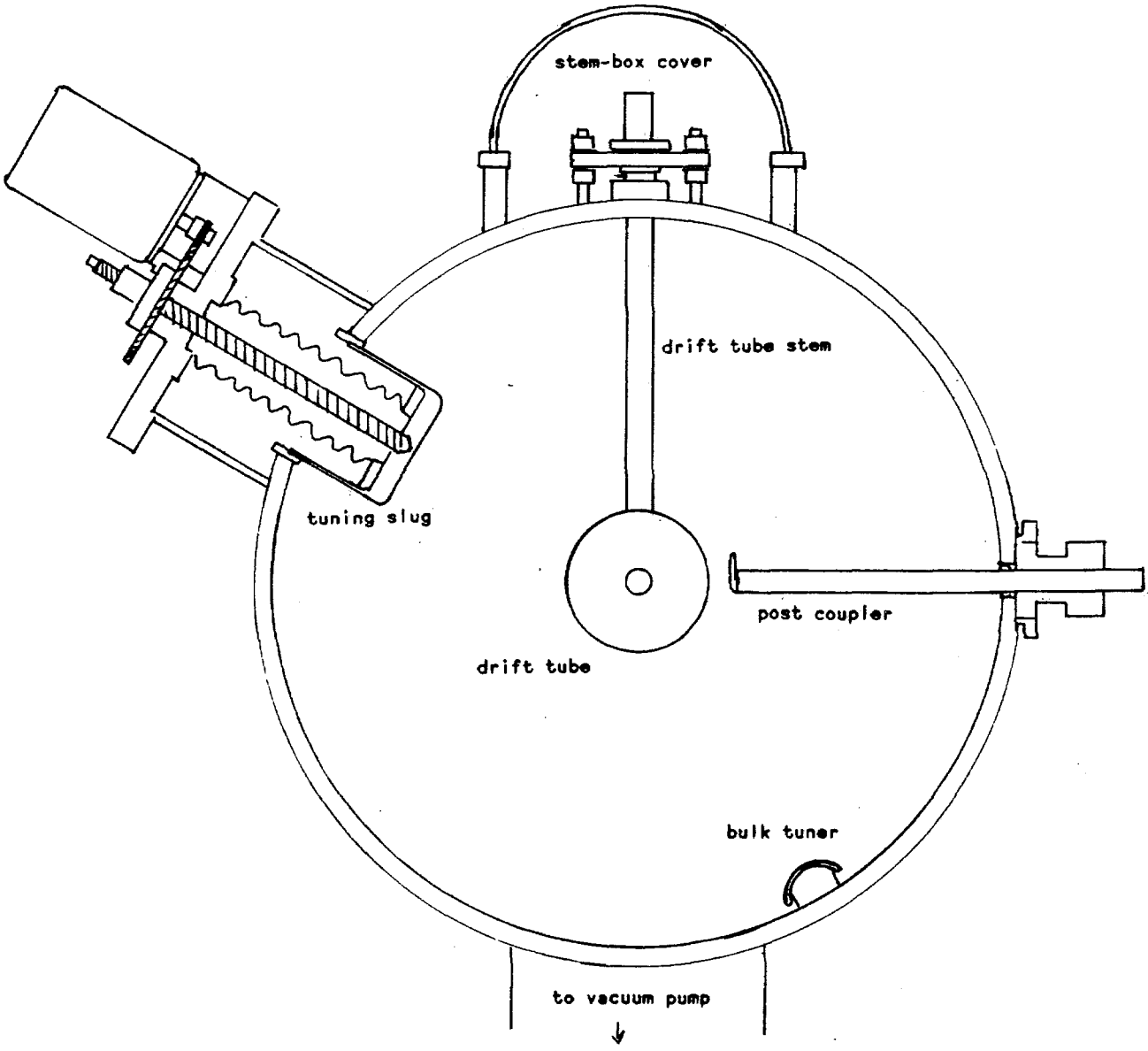

figure 4.3: linac cavity cross-section

pistons mounted in the tank wall that can be moved into or out of the tank to vary the volume. These *tuning slugs* are moved during initial set-up of a tank for frequency control and field measurements, and then set in place. One slug in each tank is motorized and is used in a servo loop to control cavity frequency during normal operation (sec. 5.1). Tanks 2-9 each have five fixed and one motorized tuning slug. These slugs are 6" in diameter and have a 5" range of travel. Tank one has twelve fixed slugs, with a thirteenth motorized. This thirteenth slug has a 2" diameter with a 2" range. Tank 1 thus has the smallest tuning range in the linac and is the most vulnerable to variations in the temperature of the cavity's cooling water.

It should be noted that although the active control of the cavity volume is through the tuning slug, this control is effective only if the temperature of the tank, as controlled by the water system, is constant to within a tenth of a degree Fahrenheit or so. If the water temperature takes off, the tuning slug ranges out very quickly and control of cavity volume is lost (sec. 10.3).

4.2 Cell Structure and Synchronous Phase

The interior of each cavity actually consists of a number of resonant cells (fig. 4.4); a cell runs from the

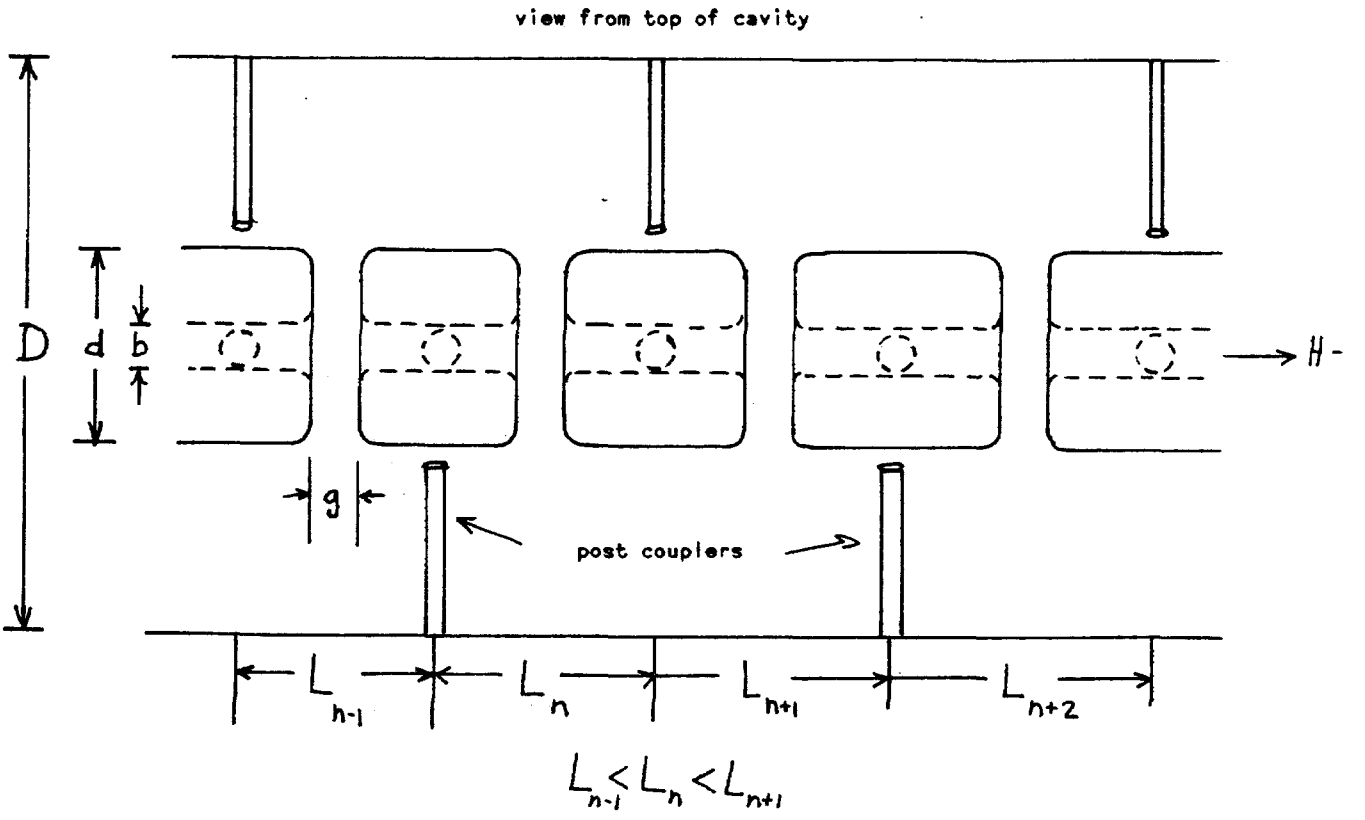

figure 4.4: RF cavity cell structure
L_n = length of cell n

middle of one *drift tube* to the middle of the next. The relative strengths of the electric fields in adjacent cells is controlled (in tanks 2-9) by the rotation of *post couplers* that stick out from the cavity walls at the cell boundaries. A small tab on the end of the post coupler biases the electric field toward one cell or the other, depending on the amount of rotation of the tab in that direction. (The first cavity in the linac has no post couplers. Cell field levels are determined by the positions of the twelve fixed tuning slugs.)

The length of the cells is such that particles traverse the gap between drift tubes when the electric field vector is pointing in the accelerating direction, and are shielded in the interior of the drift tubes ("drifting" in the absence of electric fields) when the electric field is pointing in the decelerating direction. The particles increase in energy and velocity with every gap crossed (fig. 4.5).

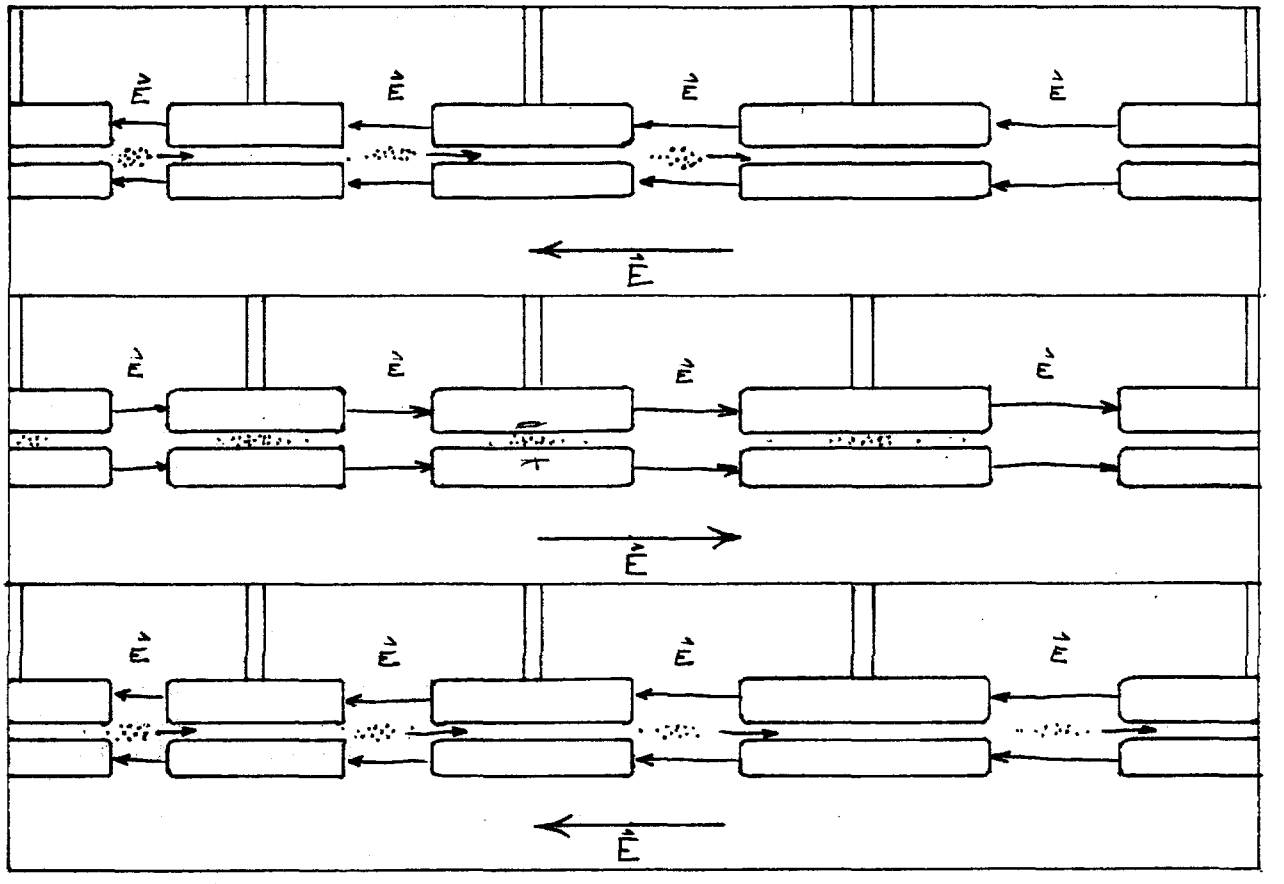

figure 4.5: alternate acceleration and coasting of particles in a linac

The RF period should be equal to the transit time of the particles across the cell. For a particle of charge e in an electric field E_o,

$$\text{energy gain} = \Delta W_o = e\int_{-L/2}^{L/2} E_o dz = eE_oL \qquad L = \text{cell length}$$

If E_o varies sinusoidally in time, the energy gain becomes:

$$\Delta W_{sin} = e\int_{-L/2}^{L/2} E_o\cos(2\pi z/L)\,dz$$

Of course, this is zero. The trick is that the drift tubes shield the particles at all times except when they traverse the narrow gap g; this takes a relatively short amount of time with respect to the RF period, so the electric field doesn't vary much. This is equivalent to altering the limits of integration to get a nonzero value for ΔW_{sin}. Define the *longitudinal transit time factor* $T_l = \Delta W_{sin}/\Delta W_o$, which is determined by cell geometry ($T_l < 1$). Then:

$$\Delta W_{sin} = \Delta W_o T_l = eE_oT_lL$$

If a particle is made to pass through the center of the cell at some phase ϕ before the maximum electric field, the energy gain becomes:

$$\Delta W_\phi = eE_oT_lL\cos\phi$$

There is one ϕ that will make the particle reach the center of the next cell just as the RF has gone through exactly 360°; this is the *synchronous phase angle* ϕ_s, with energy gain ΔW_s.

If a particle has a phase different from ϕ_s, it will have an energy gain different from ΔW_s; for a nonrelativistic particle this will result in an incorrect average velocity through the cell with resultant phase shift with respect to the RF when the particle enters the next cell. In the case where ϕ_s is before the RF peak, particles arriving early will gain less energy in the gap and slip back toward ϕ_s. Particles arriving too late will gain more energy in the gap and catch up to ϕ_s. The particle with $\phi = \phi_s$ and $\Delta W = \Delta W_s$ is called a *synchronous particle*. The synchronous phase angle in the FNAL linac is -32°. The stable phase region runs from about $-\phi_s$ to $2\phi_s$ (fig. 4.6), about 105° (TM 279). The synchronous phase angle in tank 1 is a little larger because the gradient is a bit higher.

This stable phase region also defines the length of the *RF bucket*, outside of which particles are rapidly lost.

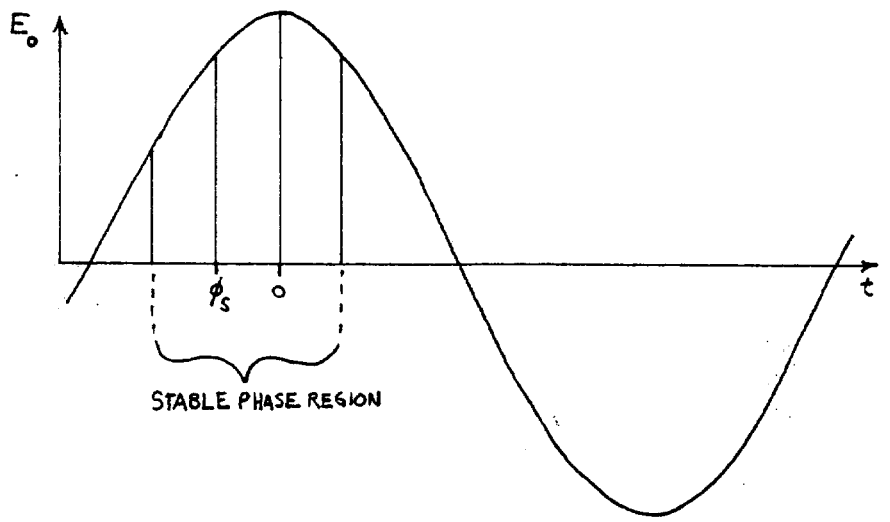

figure 4.6: stable phase region

A more conventional way to represent RF buckets is to draw them in *phase space*, where the horizontal axis represents particle position (or RF phase) and the vertical axis represents particle momentum (fig. 4.7). The RF bucket is then a curve in phase space. An excellent discussion can be found in Proton Synchrotron Accelerator Theory by E.J.N. Wilson.

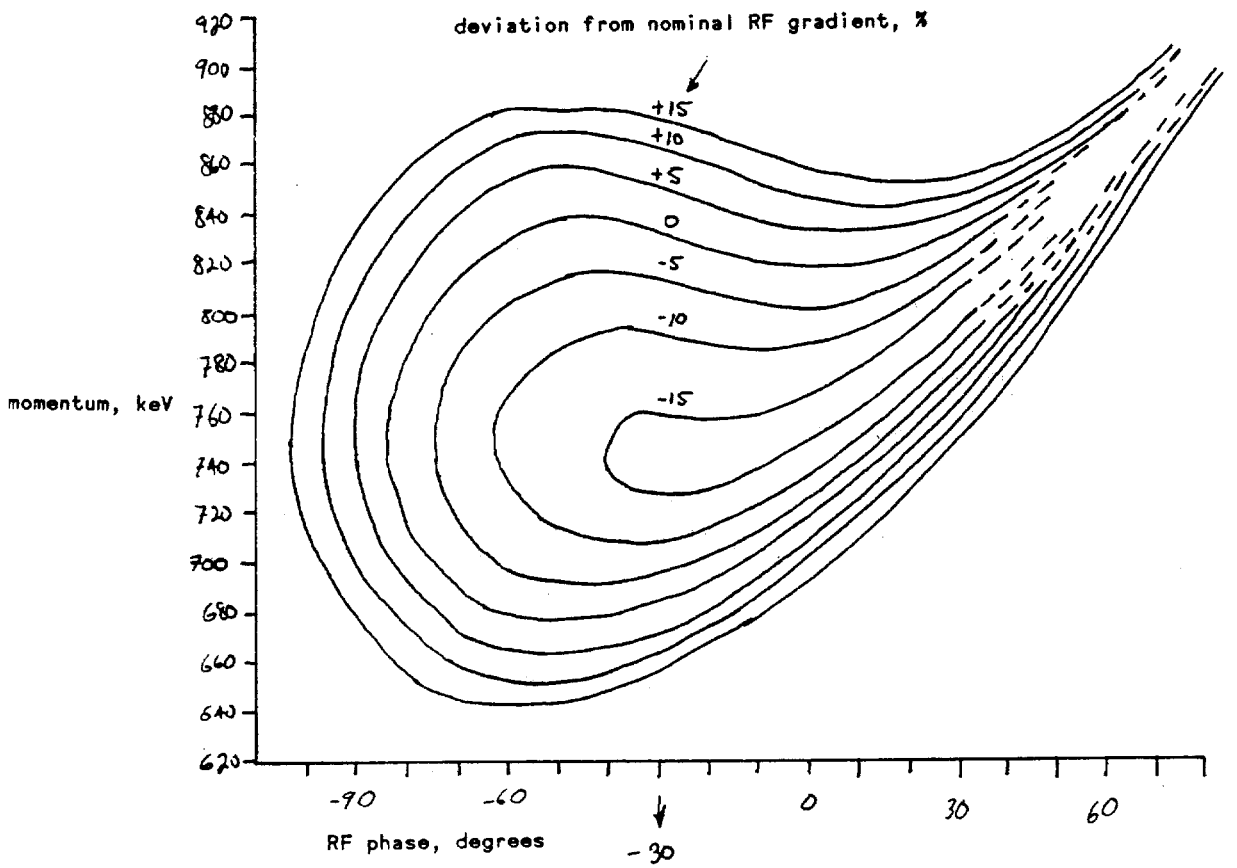

figure 4.7: linac RF bucket

If a continuous beam is injected into the linac, only about 105°/360°, or 25-30%, will be accelerated (sec. 6).

Adding drift tubes to the cells improves the transit time factor by concentrating the field near the center of the cell (fig. 4.8) so that $E_oL = E_{gap}\,g$ (g = gap length). The field has less time to change while the particle crosses the gap.

The total length of the linac, the RF power available, and the maximum surface fields allowed (about 6 MV/m in this case, though average fields are about 1 MV/m) determine the maximum E_o. The value of ϕ_s may be freely chosen, but it should be large enough to provide a usable region of stable phase space, yet small enough (near the RF peak) to provide

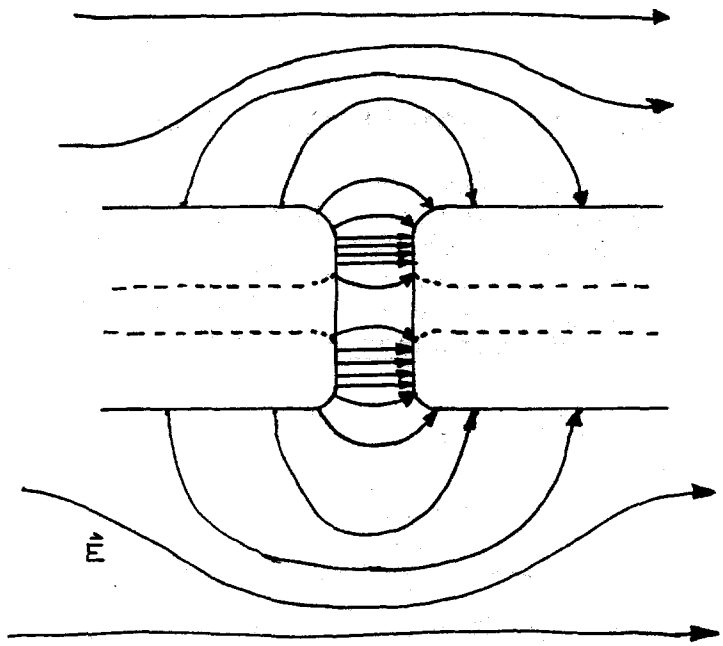

figure 4.8: cell electric field vectors

good acceleration efficiency. Once E_o and ϕ_s are chosen,

$$dW_s/dz = eE_oT\cos\phi_s$$

determines β_s(ratio of synchronous particle velocity to the speed of light) and cell length L as functions of distance. T here is the "complete" transit time factor, which takes into account the effects of the spatial distribution of E fields in the cavity. For cell n,

$L_n = \beta_s\lambda$ $\quad\lambda$ = *free space wavelength* of RF (150 cm)

The first cell in the linac is 6.04 cm long; the last is 84.3 cm long, reflecting the change in β_s from injection (0.03) to extraction (0.5). The arrangement of drift tubes in tank 1 is shown in figure 4.9.

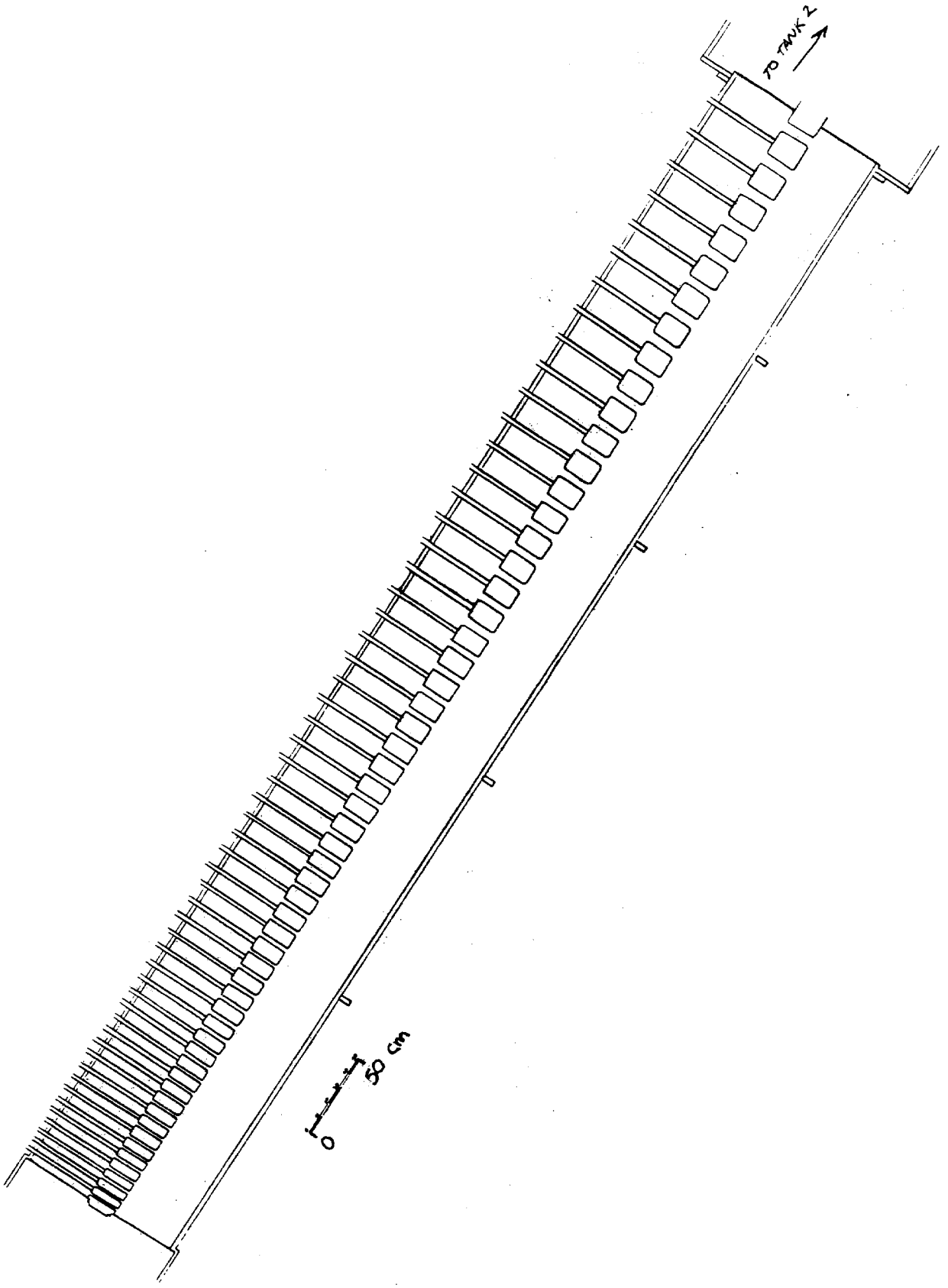

figure 4.9: tank 1 drift tubes

It should be noted that this in an important difference between proton and electron linacs. β_s for electrons approaches unity at much lower energies than for protons. Thus β_s = const. for an electron linac. This implies that ϕ_s can be designed to be zero, because it is not necessary to have a region of stable phase; an electron injected at any given phase will stay there. Setting $\phi_s = 0$ for a proton linac would maximize the energy gain for a very small number of particles, but the stable phase region would be so small that overall efficiency would be about zero. Electron linacs are simpler structures and can be made to run up to high energies (example: SLAC). Above a few GeV,/proton linacs would more closely resemble electron linacs because the velocity of the protons approaches c, but proton machines of that power would be neither inexpensive nor reliable. The highest-energy proton linac existing at this time (11/85) is the 800 MeV LAMPS facility at Los Alamos, which uses a drift tube-loaded structure at low energies, and a side-coupled structure at higher energies.

4.3 Design Considerations

The RF power required to establish a field E_o in a cell is:

$$P = (E_oL)^2/(ZL)$$

Z = normal *shunt impedance* per unit length. Define the effective shunt impedance $R_s = ZT^2$, where T is the complete transit time factor. Then:

$$P = (E_oLT)^2/(R_sL) \quad \alpha \quad (\Delta W_s)^2/(R_sL) \qquad R_s \text{ units } M\Omega/m$$

The major problems in the design of the drift tube structure are: 1) the determination of the drift tube and cavity geometry such that the structure will resonate at the design frequency; 2) obtaining the best electric field distribution near the axis (divergence as small as possible); 3) determination of R_s and T. To minimize P we must maximize R_s and T.

It is desirable to use as high an RF frequency as possible, since R_s for a particular geometry varies as $\lambda^{-1/2}$, and the power required to maintain a particular field level varies as λ^{-2}. However, decreasing λ requires that the dimensions of the cell be made smaller; this creates a problem since the borehole diameter b has a minimum size (if it gets too small the beam won't fit through). Also, as the ratio of b to drift tube diameter d increases (fig. 4.4), the effective radial variation of the field near the axis increases, introducing a large radial variation in the transit time factor which couples to radial and phase motions of the particles. Furthermore, it is necessary to incorporate radial focusing magnets (quadrupoles) in the drift tubes which implies a minimum drift-tube size. Finally, since $L = \beta_s\lambda$, there is a practical minimum injection energy for the linac.

Another trade-off involves the ratio g/L. T is optimized by making this small, but making the gap between two drift tubes very small increases the chances of sparking. Optimum values for g/L run from 0.2 to 0.4. Typically, D is fixed, and g/L and d are juggled to obtain a maximum R_s. D is a constant for tanks 2 and 3 and 5-9, but g/L varies from 0.21 in the first cell in tank 1 to 0.47 in the last cell of tank 9.

Cavity Number		1	2	3	4	5	6	7	8	9
Proton energy in	(MeV)	0.75	10.42	37.54	66.2	92.6	116.5	139.0	160.5	181.0
Proton energy out	(MeV)	10.42	37.54	66.18	92.60	116.5	139.0	160.5	181.0	200.3
Cavity length	(m)	7.44	19.02	16.53	16.68	15.58	15.54	15.83	15.88	15.73
Cavity diameter	(cm)	94	90	88	88	84	84	84	84	84
Drift-tube diameter	(cm)	18	16	16	16	16	16	16	16	16
Bore-hole diameter	(cm)	2.0-2.5	3.0	3.0	3.0	4.0	4.0	4.0	4.0	4.0
Cell length L (First cell)	(cm)	6.04	12.2	41.1	53.3	61.8	68.2	73.3	77.6	81.3
(Last cell)	(cm)	21.8	40.8	53.0	61.5	67.9	73.1	77.4	88.1	84.3
Gap length G (First cell)	(cm)	1.30	4.4	12.2	19.5	22.6	27.1	30.9	34.3	37.3
(Last cell)	(cm)	6.70	12.7	19.3	25.1	26.9	30.8	34.2	37.1	39.7
G/L (First cell)		0.21	0.20	0.30	0.37	0.37	0.40	0.42	0.44	0.46
(Last cell)		0.31	0.31	0.36	0.41	0.40	0.42	0.44	0.46	0.47
Axial transit-time factor (First cell)		0.64	0.86	0.82	0.75	0.73	0.68	0.64	0.61	0.58
(Last cell)		0.81	0.81	0.75	0.69	0.69	0.65	0.61	0.58	0.55
Effective shunt impedance (First cell)	(Mn/m)	27.0	53.5	44.6	35.0	29.6	24.8	21.5	18.9	16.7
(Last cell)	(Mn/m)	47.97	44.8	35.2	28.5	25.0	21.7	19	16.8	14.9
Drift space following cavity	(m)	0.22	0.6	0.75	1.0	1.0	1.0	1.0	1.0	--
Number of full drift tubes		55	59	34	28	23	21	20	19	18
Average axial field	(MV/m)	1.60-2.31	2.0	2.60	2.60	2.56	2.56	2.56	2.56	2.56
Average gap field (First cell)	(MV/m)	7.62	10.0	8.7	7.03	6.9	6.4	6.1	5.8	5.6
(Last cell)	(MV/m)	7.45	6.45	7.2	6.3	6.4	6.1	5.8	5.6	5.4
Peak surface field (First cell)	(MV/m)	9.9	12.6	13.1	12.9	14.0	14.1	14.2	14.3	14.5
(Last cell)		10.2	9.7	12.9	13.2	14.1	14.2	14.3	14.5	14.8
Cavity excitation power	(MW)	0.61	1.50	2.34	2.44	2.50	2.55	2.65	2.70	2.75
Total power per cavity for 100 mA	(MW)	1.58	4.20	5.20	5.08	4.90	4.79	4.81	4.75	4.68

Total accumulated length	144.8
Total number of unit cells	286.0
Total number of full drift tubes	277.0
Total cavity excitation power	20.0
Total linac rf power for 100 mA	40.0

figure 4.10: FNAL linac specifications

Since each tank is made up of a series of resonant cells, the decision where to "end" the tanks is somewhat arbitrary. It is necessary for the E fields in the tanks to have a very strict phase relationship to one another, so it would be nice to have all the cells in one tank. This would require an enormous and impractical (and very expensive) RF system. There is also a maximum practical limit for the length of a tank: about 20 free space wavelengths. This is because the separation of electromagnetic standing wave modes decreases as length^{-2}, and the effects of mechanical imperfections on local frequency errors increases as $(\text{length}/\lambda)^2$, resulting in difficulty maintaining the desired field distribution in the cavity.

Finally, there is a simple trade-off between RF power required and overall length L of the linac. Since

$$PL \propto (\Delta W_s)^2/R_s = \text{const. (for a given geometry)}$$

one can use less powerful (read: cheaper) RF if the linac is made longer. However, the costs of drift tubes and supporting structures usually make it most practical to obtain the largest reasonably-priced RF systems available. (The RCA 7835 power amplifiers used in the FNAL linac were originally developed for use in radar stations.)

The total cost of a linac is then:

$$\text{cost} \simeq (B/E_o) + (E_o)^2/C + \text{constant}$$

where the first term represents building costs and the second term represents RF system costs.

5 LINAC RF SYSTEMS

Each of the nine accelerating cavities in the linac has its own RF system which drives the cavity fields at the *gradient* (electric field amplitude) and phase necessary for maximum energy gain. A tenth RF station, used for component testing, drives a dummy load.

Every linac cycle (66 msec) the RF systems provide a 400 μsec pulse for the acceleration of beam. In between RF pulses, the cavity fields collapse. Since the cavities are a highly resonant system (Q>60,000), with a drift tube geometry that assumes a certain energy gain per cell, the degradation of any RF system will strongly affect the transmission and output momentum of the linac; failure of an RF system will make transmission of beam through the linac impossible.

Each RF station consists of a low- and high-level RF system. The low-level system provides a half-watt sine wave signal of the appropriate duration and phase for the high-level system, which amplifies the signal to about 5 MW. This signal is sent via a 9-3/16" coaxial *transmission line* to the cavity, where the magnetic field created by the signal induces surface charges on the drift tubes, which in turn drive the electromagnetic field.

The low-level system (OPBULL 1054) consists of a *master oscillator* and a phase control system, which adjusts RF phase to compensate for: a) cavity tune, b) *beam loading* on the cavity, and c) to maintain the correct phase relationship between adjacent cavities.

The high-level system includes the amplifier chain, associated anode and filament supplies, the *modulator*, the transmission line, and the cavity itself.

5.1 Low-Level RF

A single master oscillator supplies the 201.24 MHz drive signal for all the linac RF stations. This oscillator is ~~located in the NTF control room by system~~ 5. The operating frequency may be read on a *computing counter* there. The oscillator output is fed to a power splitter and runs off in two directions. One output goes to the buncher and systems 1-4. The other output goes to systems 5-10 and the debuncher (see Basic Booster for Beginners by John Crawford for a description of the debuncher). The signal is teed off through an attenuator at each station.

Entering the *frequency control and phase lock module* module in the RF system control racks (fig. 5.1) the signal first goes through two phase shifters (SH1 and SH2) that are used in the regulation of intertank phase; the output of these shifters is the desired RF phase for that station. Power splitter PS1 sends the signal to phase shifter SH3, which in turn feeds a mixer, which turns the continuous-wave signal to pulses, as governed by the *waveform generator/sequencer* (not shown). This pulsed RF signal then is amplified by a series of two solid state and three tube amplifiers. The drive signal is then sent via the transmission line to the cavity.

Pickup loops in the cavity measure the magnetic field in the center and at each end of the cavity. The output of the center pickup loop is sent to a power splitter PS2, a phase shifter PS4, and is compared with the "desired" RF phase at the *phase comparator mixer* PC1. The bipolar output of this circuit (*phase lock input*) is designed to be zero when the correct relationship exists between the desired and actual RF phases. The signal is raised by five volts (*phase lock output*) and drives the phase shifter SH3. This counteracts the effects of cavity RF phase shifts caused by beam loading on the cavity (as the beam extracts energy from the cavity), the effects of PA tube and modulator aging, and the vagaries of tuning. This sometimes known as the "fast" feedback loop.

A second loop acts to keep the cavity tuned to the correct frequency. When correctly tuned, the cavity looks like a purely resistive load; the cavity field is in phase with the applied voltage. Any phase difference due to a mistuned cavity can be observed by comparing the RF phase in the transmission line with the RF phase in the cavity. The "slow" loop does just this. A second output of power splitter PS2 goes to phase shifter SH5 and to one input of phase comparator mixer PC2. The other input comes from the *forward power* pickup loop in the transmission line ("forward" is specified because there is also a *reverse power* loop that measures power reflected from the cavity). The output of PC2 is zero at the desired phase relationship between the inputs, which is set by the frequency adjust potentiometer. This is done after the power amplifier reverse power (transmission line reverse power pickup loop) has been tuned for a minimum.

If the output of PC2 is nonzero, the *frequency control module* will then tell the stepping motor driver to move the tuning slug, which alters the cavity resonant frequency.

The last feedback loop maintains the desired phase relationship between cavities (the distance from one tank to the next may not be an integral number of cell lengths). The low-energy end pickup loop of cavity n is compared with the high-energy end pickup loop of cavity n-1. The signal from cavity n-1 is first fed through a *mechanical phase shifter* (mounted in a box strung between the

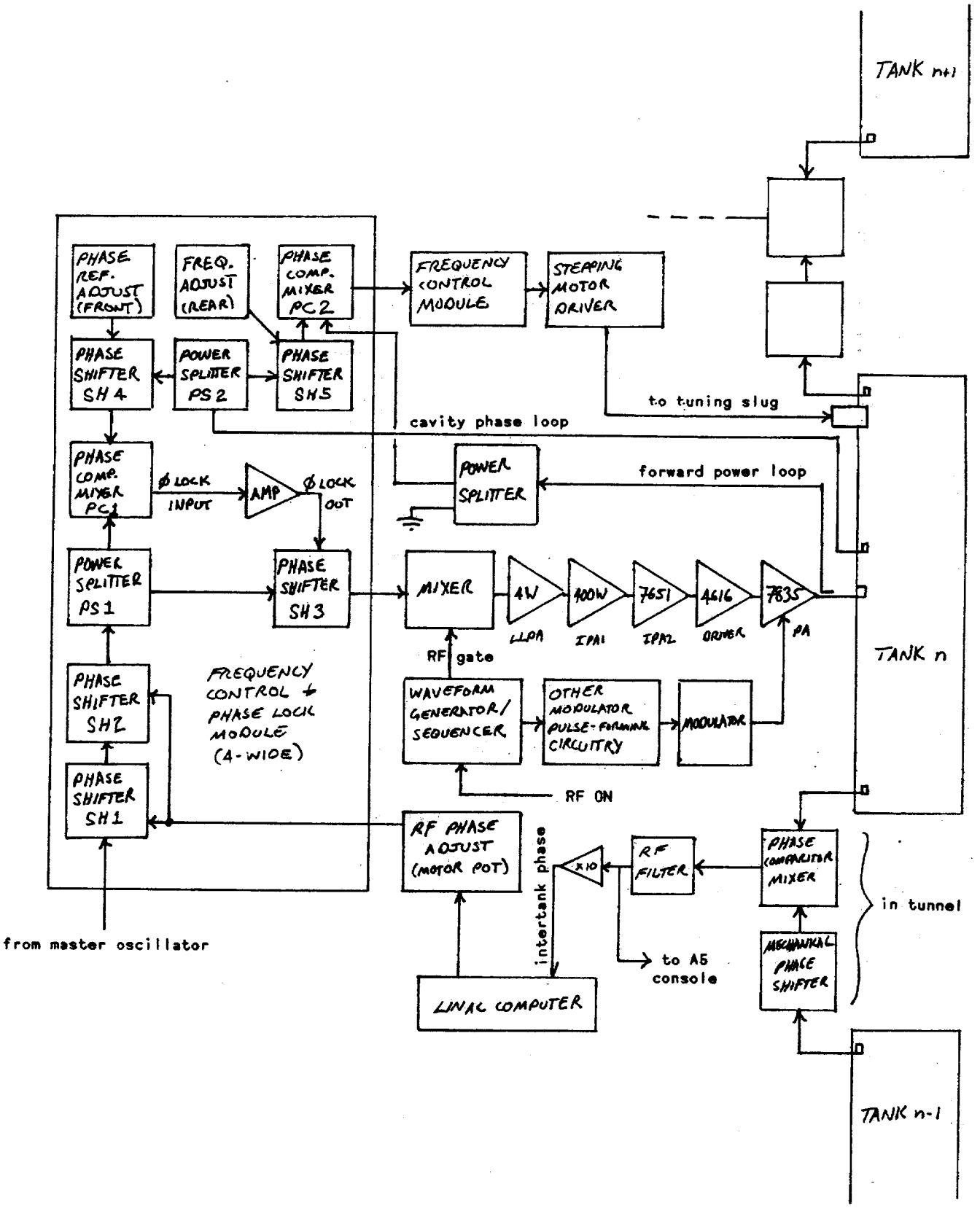

figure 5.1: linac low-level RF system

cavities) which is set so that the output of the phase comparator mixer is zero at the desired phase. The mixer output is filtered, amplified, and sent to the linac computer as *intertank phase*. The computer acts to keep this near zero by controlling a motor-driven potentiometer in the *RF phase adjust module*. The two 180° phase shifters SH1 and SH2 then control the phase at which cavity n tries to run. The greatest phase difference between any two cavities should be less than 2°.

5.2 High-Level RF

The output of the mixer in figure 5.1 ultimately will become the signal that drives the cavity, after being amplified by seven orders of magnitude. In figure 5.2 the signal first passes through a solid-state amplifier with an output of about four watts (sometimes referred to at the *LLPA*, for Low Level Power Amplifier) located in the rear of the RF system control (A5) racks. The signal then travels to the driver (A11) racks, where a second solid-state amplifier (called the first *IPA*, for Intermediate Power Amplifier) boosts the signal to 400 watts (OPBULL 288). This then drives the cathode of the second IPA, an RCA 7651 *tetrode* with an output of 4 kW. Passing through a coupling capacitor, the signal drives the grid of the driver tube, an RCA 4616 tetrode with an output of 200 kW. Through another coupling capacitor, the output of the driver passes through a 3-1/8" diameter transmission line to the cathode of the power amplifier. The RCA 7835 triode has a peak power output of 5 MW with a duty factor of 0.0075; these powerful tubes cost $40,000-$80,000 each. The general layout of RF system components is shown in figure 5.3.

The RCA 7835 operates at a nominal filament current of 6600 amps at a potential of about 5 volts. This is supplied by two double-Y, full-wave bridge rectifiers. Control of the output current is obtained through a brushless motor-driven induction regulator (*inductrol*) connected to the input of the filament power supply. The power supply output current is regulated to about ±0.5% over a 6000-7000 amp operating range.

The inductrol varies the input voltage to the filament power supply to control the output current. It thus acts to compensate for variations in line voltage. This is fine, except that the inductrols are mechanical devices subject to wear and tear (and smoke and flame); therefore all the inductrols are set into the regulate mode only between the main ring reset and the start of main ring ramp. This gating is controlled by the *filament regulator gating module* behind system 6 (OPBULL 121). In its present (3-86) form, it responds only to main ring ramp times. It is destined to be modified for more flexibility to cope with the more elaborate accelerator sequencing that the Tev 1 program has introduced. Binary status is available through the microprocessor for system 6; bit 63C is set to 1 if the inductrols are in the regulate mode.

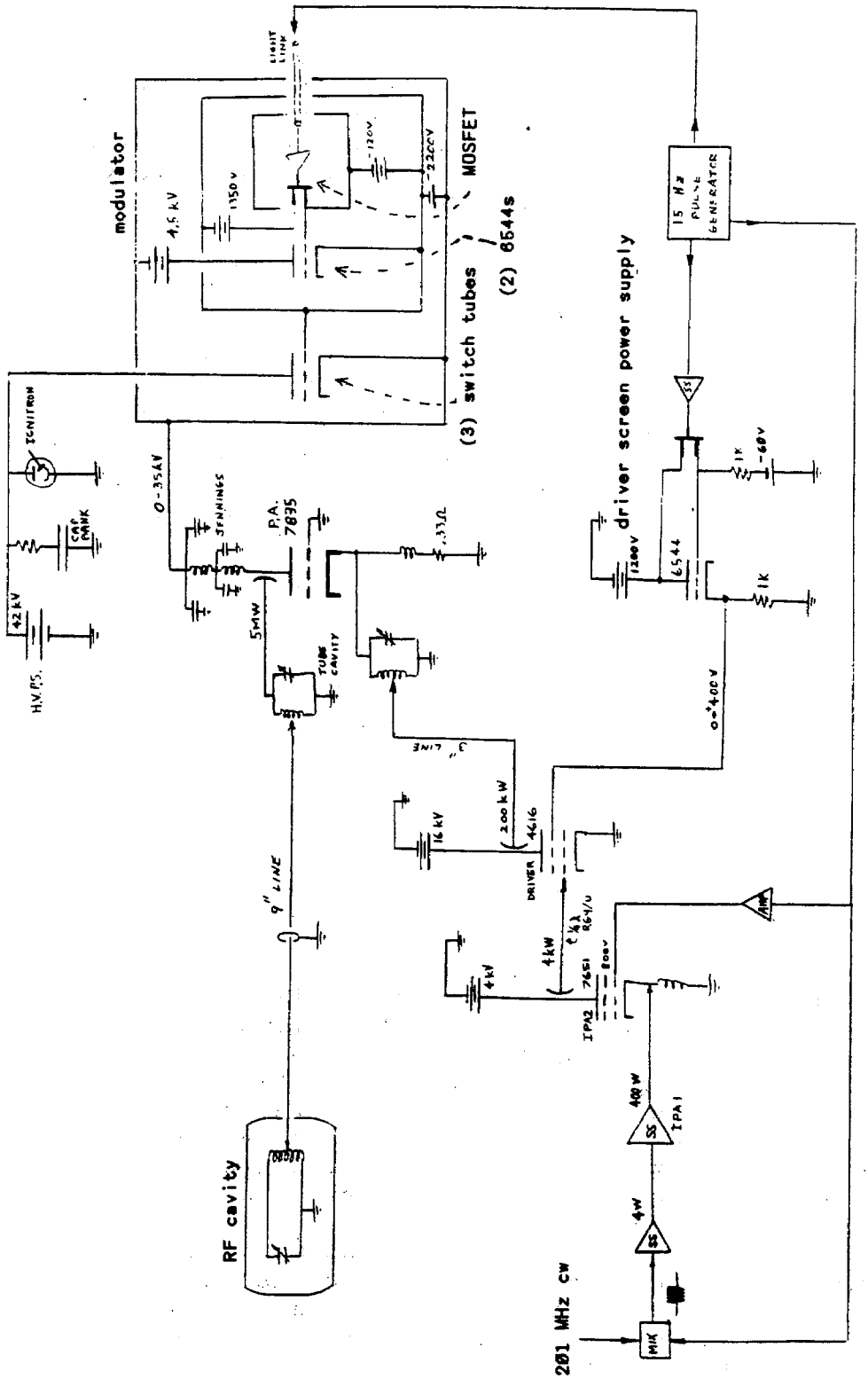

figure 5.2: high-level RF system (courtesy Mike Utes)

The inductrol and filament power supply are located in the lower linac gallery. Controls for the inductrol voltage regulation loop are on the front panel of the filament supply, but have been disconnected at most stations and are thus not tunable. The filament leads to the PA are water-cooled cables that pass up through the floor and connect to junction blocks at the bottom of the PA. Dropping a wrench across the junction blocks is a bad idea.

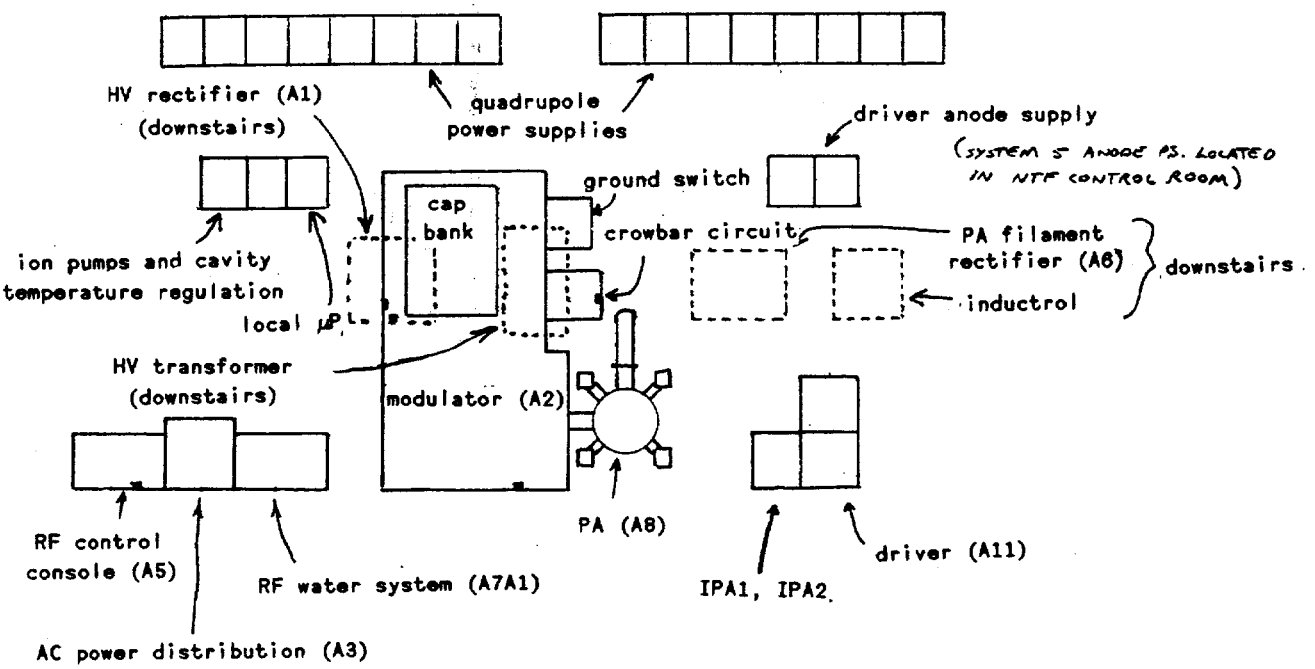

figure 5.3: bird's eye view of RF system component layout "A" numbers are RF system unit numbers

The capacitor-coupled 5 MW output of the PA drives the 9-3/16" diameter coaxial transmission line (TM 94) which runs to the cavity (fig. 5.4). The transmission line and PA are pressurized with nitrogen at 1.5-2 atmospheres to reduce the chance of sparking. Passing from the rear of the PA, the line runs through the floor to the lower gallery, passes through a $\lambda/2$ range *trombone* (used to adjust the total length of the line, which must be an integral number of RF wavelengths long), and then runs horizontally through the wall into the linac enclosure.

At this point it is necessary to isolate the nitrogen in the transmission line from the vacuum in the cavity; this is handled by a ceramic annulus, called a *gas barrier*, that fills the area between the conductors of the transmission line but is transparent to electromagnetic fields.

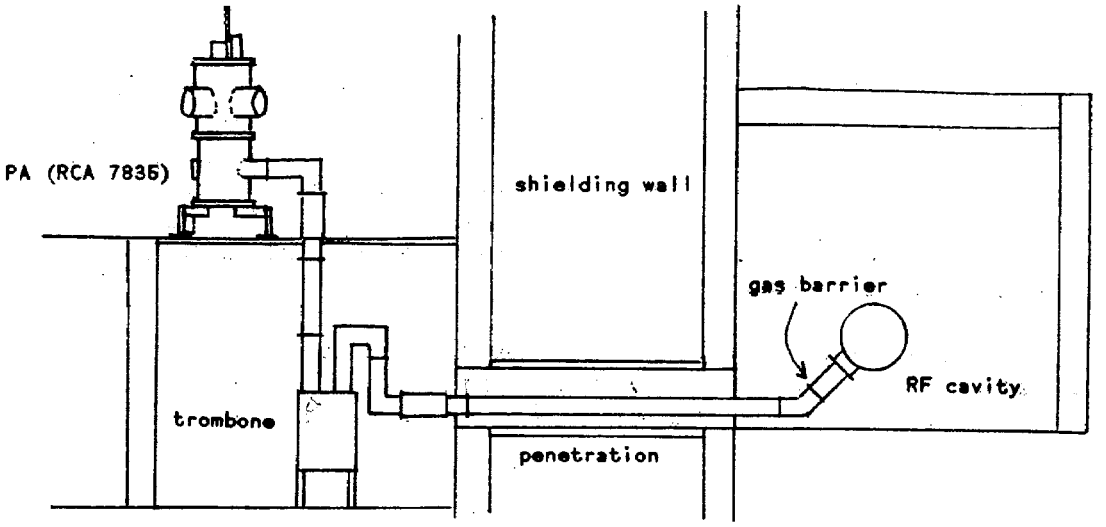

figure 5.4: transmission line layout

Once past the gas barrier, the transmission line runs into the cavity where it terminates in the *drive loop*. The center conductor of the transmission line runs unshielded for six inches, turns two right angles and then is terminated to the outer conductor(fig. 5.5). The drive loop formed by the center conductor does not protrude into the cavity, but is recessed in the wall. The loop transmits the energy to the cavity as the magnetic fields produced by the alternating currents in the center conductor cause charges on the drift tubes to flow, thus creating electric fields.

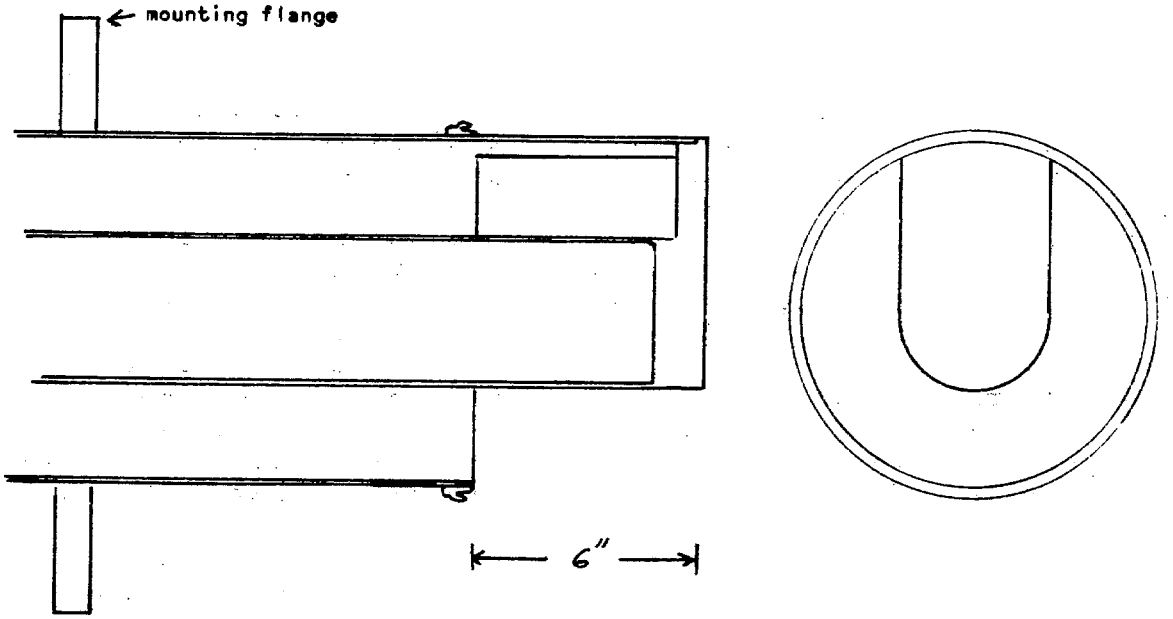

figure 5.5: RF cavity drive loop

5.3 Modulator

Although the intermediate power amplifiers and driver deliver the RF waveform to the cathode of the power amplifier, the actual pulse duration and power output of the PA are controlled by the voltage on the anode; this is provided by the modulator, the large box to the left of the PA. The linac modulators and PAs were custom-built by the Continental Electronics Manufacturing Company of Dallas, Texas.

The outer envelope of the PA waveform is defined by the modulator waveform (fig. 5.6), which is defined in turn by two modules in the A5 racks. Not only must the pulse be of

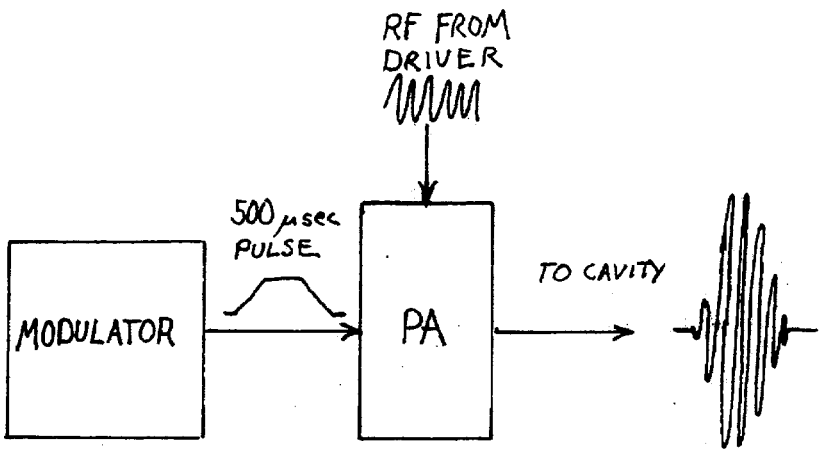

figure 5.6: modulator control of RF gradient

correct amplitude and duration, but the sequence of events that turns the RF station on and off must be carefully controlled to prevent damage to the components. For instance, if modulator voltage is applied to the PA's anode when there is no drive on the cathode, the PA could break into oscillation and destroy itself (OPBULL 75). If the modulator pulse starts or stops too suddenly, the resultant abrupt variation of RF drive to the cavity could result in a high voltage standing-wave ratio (VSWR) and arcing across the gas barrier or the PA ceramic (very, very bad).

When an RFON timing pulse is received from the preaccelerator control room (sec. 3.1), the waveform generator/sequencer module (fig. 5.7, 5.8) first looks to see that an interlock enable from the *pulse interlock module* also exists. If so, after a 5 to 75 μsec delay (MOD START adjustment on the front panel of the waveform generator) a pulse is sent to the driver pulse controller to tell the driver to turn on. At the same time, a gate to the mixer goes high and the permits the drive signal from the low-level system to reach the amplifier chain. The combination of these two should result in 200 kW output of RF from the driver. After another 8.5 μsec, the pulse interlock module looks to see that the driver output is indeed

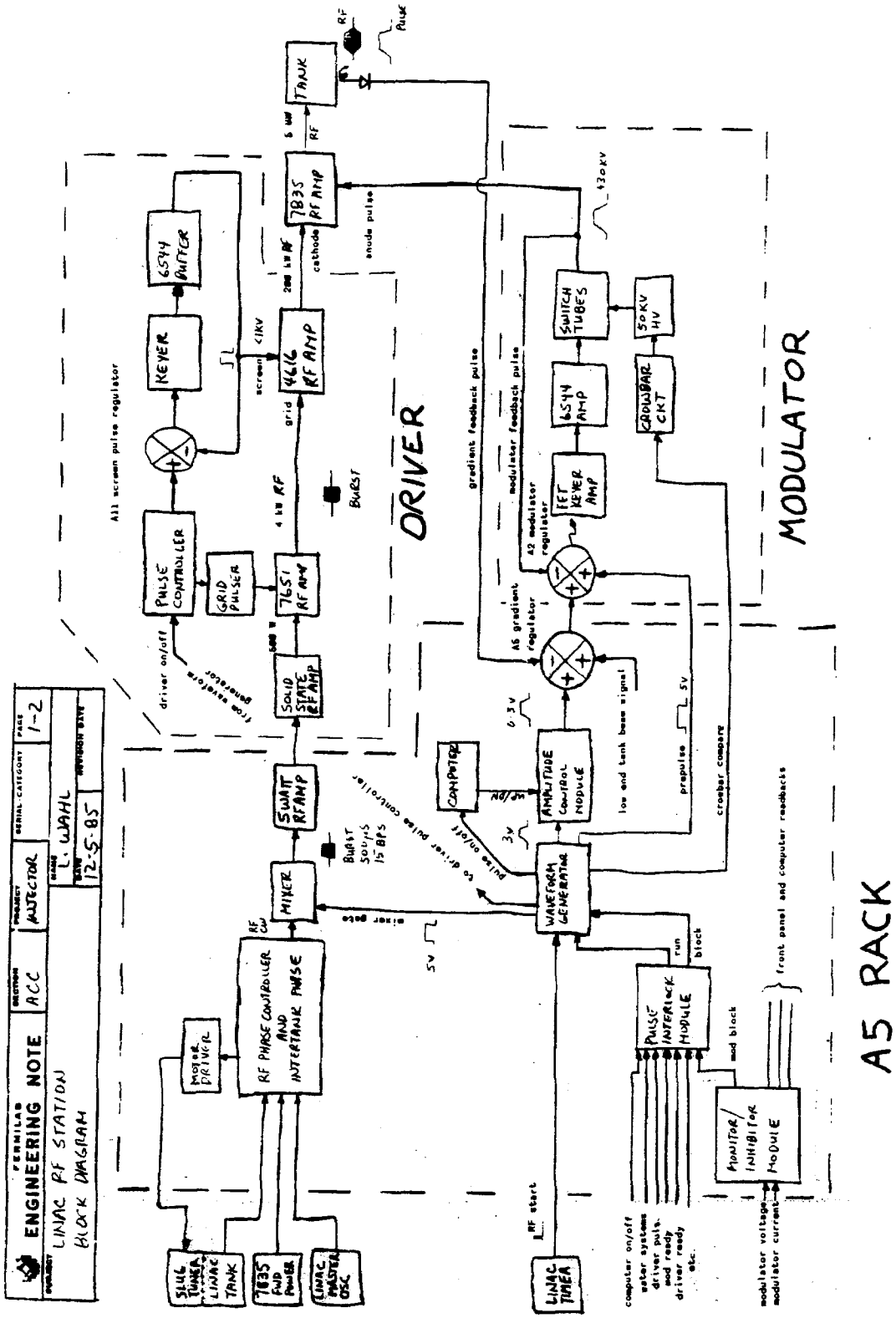

figure 5.7: modulator pulse-forming circuitry and feedback loops

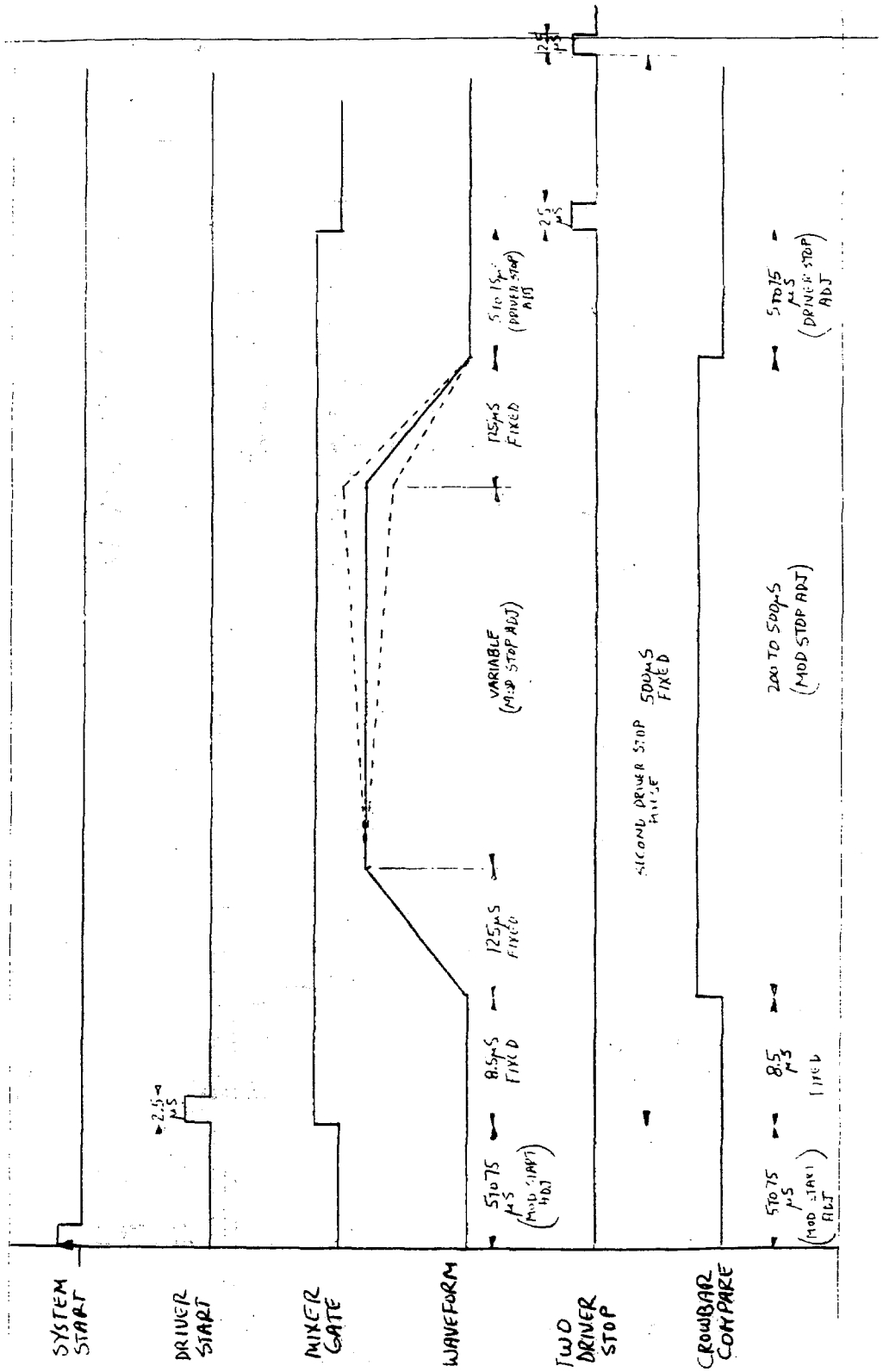

figure 5.8: modulator pulse timing

above 175 kW. If so, the interlock module sends a waveform enable to the waveform generator; if this signal doesn't appear, the modulator gradient will remain at zero and a driver stop pulse will occur 500 μsec later.

The modulator pulse begins with a 125 μsec linear ramp up to the three-volt level. The ramp down portion of the modulator pulse is also 125 μsec long. The total length of the modulator pulse (200-500 μsec) is set by the mod stop adjustment.

After a 5-75 μsec delay (DRIVER STOP adjustment) relative to the end of the modulator pulse, the driver stop pulse turns the driver off. The mixer gate also goes low at this time, removing the low-level signal from the amplifier chain. A second driver off pulse occurs after a fixed 500 μsec delay relative to the driver start pulse.

There are ten preprogrammed modulator waveforms available, selected through a rotary switch on the front of the waveform generator. A tilt switch affects the flattop portion, allowing it to slope up or down to compensate for any droop in the high-voltage power supply for the modulator, but this has not been needed. There is also a switch that will disable the output of the module to keep the RF system from pulsing.

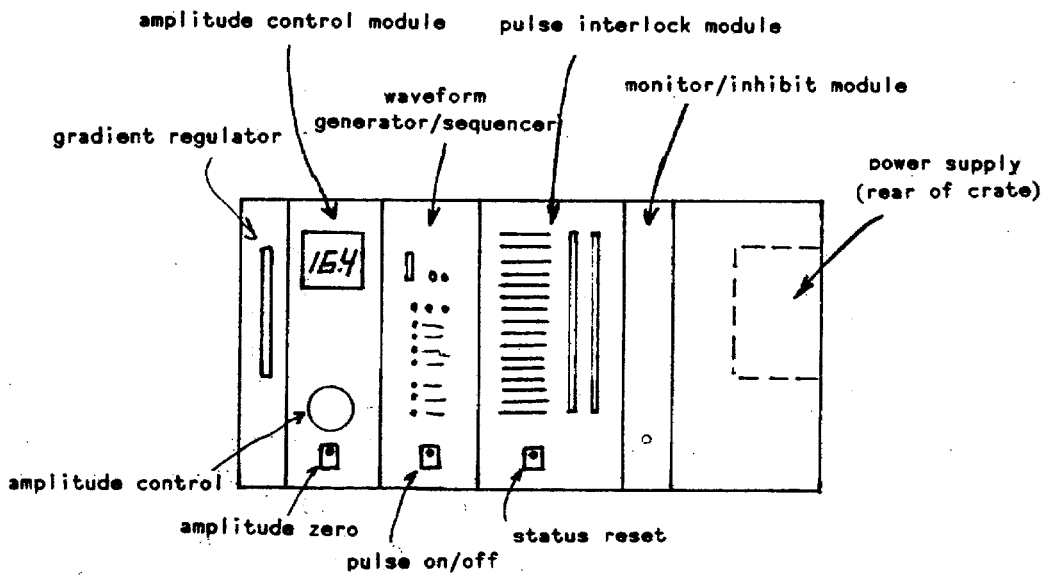

figure 5.9: modulator pulse-forming circuitry hardware in A5 racks

The *amplitude control module* determines the size of the modulator input pulse and thereby the gradient level in the cavity. It is essentially a variable attenuator. The output of the waveform generator is fed into a digital to analog converter that is controlled by a counter. The counter looks at clockwise (increase D/A output) or counterclockwise (decrease D/A output) pulses that come either from the linac computer or the local knob input. The output of the D/A then is buffered to remove glitches and is sent to the *gradient regulator*. An LED readout on the front of the amplitude control module shows the pulse amplitude in

percent of maximum. A latching pushbutton below the knob zeroes the output of the module.

The gradient regulator loop keeps the cavity gradient within the specified 0.1% tolerance and compensates for beam loading. The gradient regulator module receives the output of the amplitude control module, as well as a gradient signal from the tank and a beam signal from the toroid mounted in the upstream end of the tank. An increase in the gradient signal lowers the output of the regulator while an increase in the beam signal raises it.

A second gradient control loop is handled by the local microprocessor, which samples the A/D channel that represents the cavity gradient once per beam pulse or once every ten seconds in the absence of beam (sec. 14.1, OPBULL 797), and adjusts the setting of the amplitude control module accordingly. This loop is inactive if the gradient's A/D readback falls below 0.8 volts.

The signal then passes from the crate in the A5 racks to the *modulator regulator* module mounted in the front of the modulator itself. The modulator regulator acts to keep the modulator current at the level needed to maintain the desired cavity gradient. It looks at the current flowing from the cap bank to the switch tubes and raises or lowers the input to the modulator to maintain the desired output. A pre-pulse from the waveform generator/sequencer gates the regulator on and off.

The signal is then ready for amplification by the modulator. It is converted to a 200 μW light pulse and sent through a fiber-optic cable to the first stage of the modulator, which is at a high potential, like the ion source.

Inside the modulator are three nested boxes (fig. 5.10, OPBULL 1056), each the output of one stage of amplification. The three stages are thus shielded from one another, permitting a higher input capacity for each stage. The input waveform from the gradient regulator is sent inside the innermost box; there it is amplified and fed to a *keyer* (a solid-state pulser using a big power transistor) which results in a 1 kV pulse. The output of the keyer is tied to the innermost box, which pulses from -120 V to 1.2 kV.

The first box is tied to the grids of two Maclett 6544 tetrodes. The anodes of these tubes sit at 4.5 kV. The cathode outputs are tied to the second box, which pulses from -2.2 kV to 4 kV.

The second box is tied to the grids of three Westinghouse WL-23646 or ITT F-1123 triodes, known as the *switch tubes*. Their anodes are tied to a 30 μF capacitor bank in the rear of the modulator which is charged by a 50 kV transformer. The transformer is in turn driven by an *SCR*-controlled rectifier. Transformer and rectifier are located in the lower gallery.

The capacitor bank stores about 24 kJ of energy at 40 kV. The cathodes of the switch tubes are tied to the third and outermost box, and from there to the anode of the PA. The output of this stage pulses from zero to about 30 kV, turning on the PA to form the RF pulse.

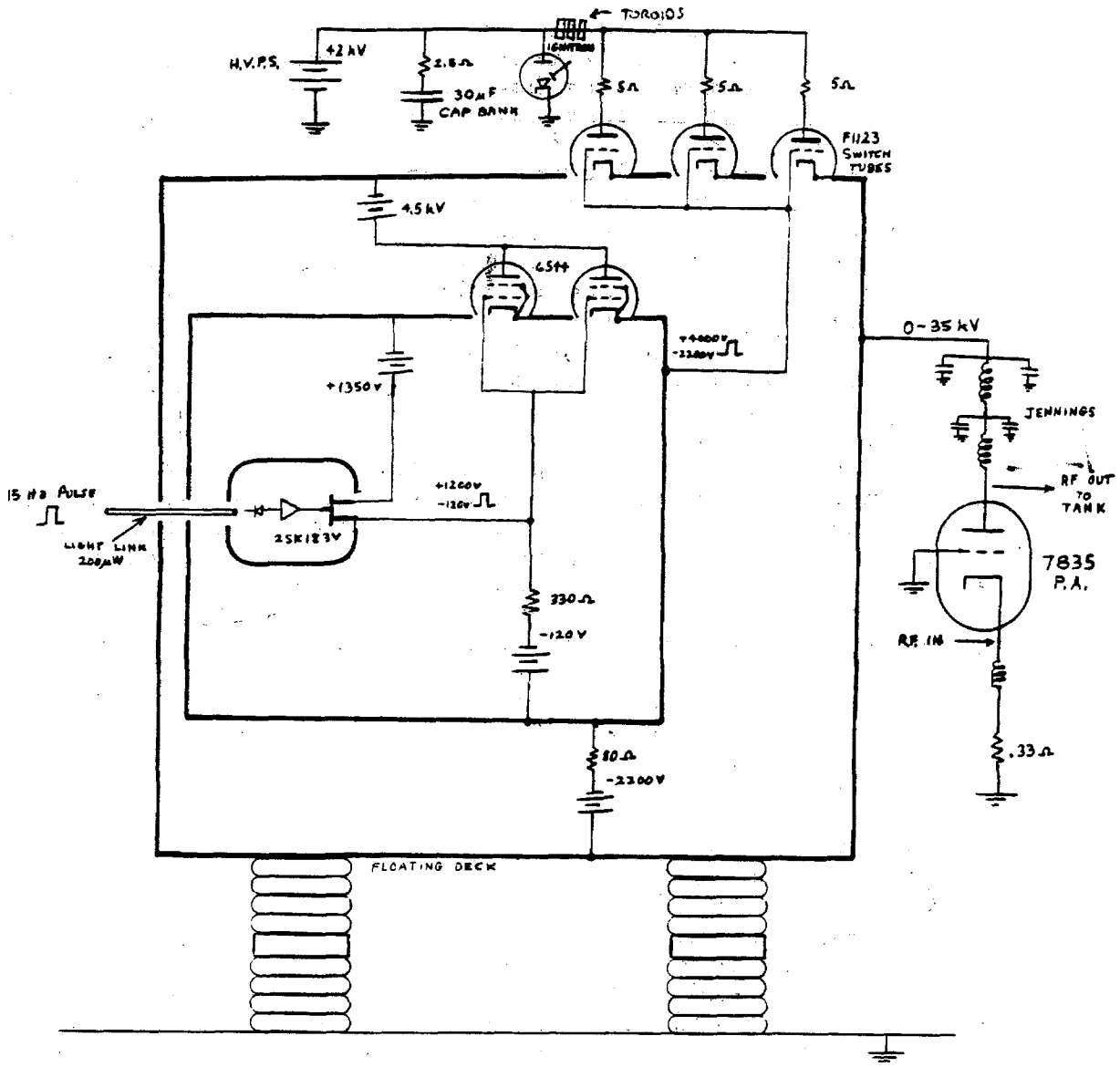

figure 5.10: linac modulator (courtesy Mike Utes)

Around the line from the capacitor bank to the switch tube anodes are three toroids. These are used to measure the current drawn by the modulator.

One toroid is used to sense the modulator current for the gradient regulator circuit. A second toroid is used to provide a signal for the modulator current readback and oscilloscope trace, and to trigger *mod blocks*; the *monitor/inhibitor* module watches the output of the toroid during the pulse. If the current exceeds 400 amps, the pulse is inhibited for the remainder of that cycle by sending a mod block signal to the pulse interlock module. Four consecutive mod blocks is indicative of a sparking in the PA or the transmission line (OPBULL 692) and causes a *permanent inhibit*. A permanent inhibit both inhibits the pulse and turns off the SCR controller for the HV power supply for the cap bank until a manual reset is done; it

also reduces the setting of the amplitude control module if the system is not reset within 30 seconds. This is done so that when the system turns back on, the reflected power from the cooler and out-of-tune cavity will not be so great.

The third toroid is used to sense a *PA crowbar*. This requires a current of 600 amps during the pulse or 125 amps between pulses. The *crowbar compare* circuitry, located in a relay rack on the right side of the modulator (behind the PA) receives the crowbar compare level from the waveform generator so that it knows when the pulse occurs. This signal goes high at the start of the modulator pulse, telling the crowbar detector circuit in the modulator to change the crowbar level from 125 to 600 amps. The the end of the pulse, the signal goes low again, and the crowbar level returns to 125 amps.

A crowbar that occurs during the pulse is indicative of a sustained arc in the modulator, usually in the switch tubes. Indicators inside the modulator (left-hand window) will latch when a switch tube arc occurs. The accuracy and usefulness of these indicators has been questioned by some. Exactly how serious a switch tube arc is depends upon the circumstances, and repeated arcs should be brought to the attention of a linac RF specialist. A crowbar that occurs between pulses indicates that the modulator is coming on when there is no drive on the PA cathode, which is potentially lethal to the PA.

A PA crowbar fires the permanent inhibit, and shorts the capacitor bank to ground through a device called an *ignitron*, which is designed to pass large currents in a very short time. Inside the ignitron (fig. 5.11), the cap bank connects to an anode suspended above a pool of liquid mercury, which is at ground potential. The anode and the mercury are in close proximity but do not make electrical contact. Just under the surface of the mercury are two electrodes connected to a thyratron in the crowbar cabinet. A crowbar fires the thyratron, causing the mercury to vaporize. An arc forms in the vapor between the anode and the mercury pool as the current flows to ground. A thirty second timer prevents the pulse from being reset until the ignitron recovers. The ignitron is physically located on the floor in front of the cap bank toward the front of the modulator right next to the toroids. It is warmed by two heat lamps and is thus hard to miss.

After the 30-second timeout an automatic reset occurs; the permanent inhibit has reduced the gradient setting of the amplitude control module to half value, and the computer then runs the gradient slowly back up to 0.8 volts (A/D). The regular gradient regulation loop then takes over if the *auto-gradient* for that station is enabled (OPBULL 797, sec. 14.1). If, after having sent 200 "increase gradient" pulses to the amplitude control module, the RF gradient is still less than 0.2 volts, the computer will stop trying to raise it and operator intervention will be necessary.

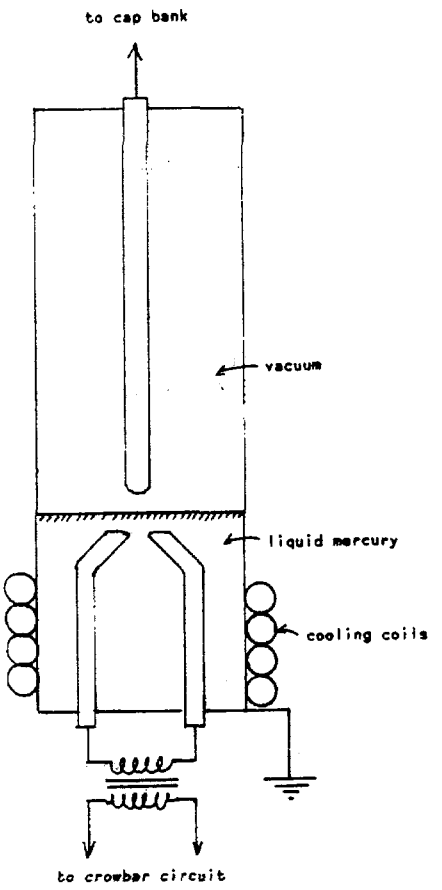

figure 5.11: ignitron

5.4 RF System Operation

The cavity gradients and phases have a direct effect on the output momentum of the linac. Nominal values for these are NOT to be changed. Tuning of these parameters consists strictly of keeping them at their nominal values.

The second IPA, driver, and PA tubes are high Q tuned resonators that require occasional tuning, due to tube aging and fluctuations in supply voltages. The forward and reverse power of each stage (the power sent to and reflected from the load) are tuned by adjusting resonant input and output cavities on the tubes. Forward power is tuned to a specific level, while reverse power is tuned for a minimum, matching the impedance of one stage to the next. Reverse power of stage n is tuned by adjusting the input cavity of stage n+1, which affects the forward and reverse power of stage n, which affects the forward power of stage n+1, and so on.

Each tube cavity has two adjustments, tuning and loading. The tuning adjustment actually changes the resonant frequency of the tube cavity, and the loading adjustment changes the coupling between the cavity and its load (the adjacent stage). An overview of the driver racks where most of this tuning is done is shown is figure 5.12.

Tuning an RF system is covered in OPBULL 1050. Some adjustments are relatively insensitive (like driver output tuning) while others are forbidden (PA output tuning). Once all the stages have been tuned, the total phase shift across the amplifier chain will have changed, necessitating an adjustment of the fast feedback loop to zero phase lock input during beam time. The general layout of the RF system control panel is shown in figure 5.13.

Once the procedure in OPBULL 1050 has been followed, connect the PHASE LOCK INPUT signal to the scope. It should be zero during beam time. If not, zero it using a small screwdriver to turn the PHASE REF ADJ pot on the front of the frequency control and phase lock module. PHASE LOCK OUTPUT should then be five volts at beam time.

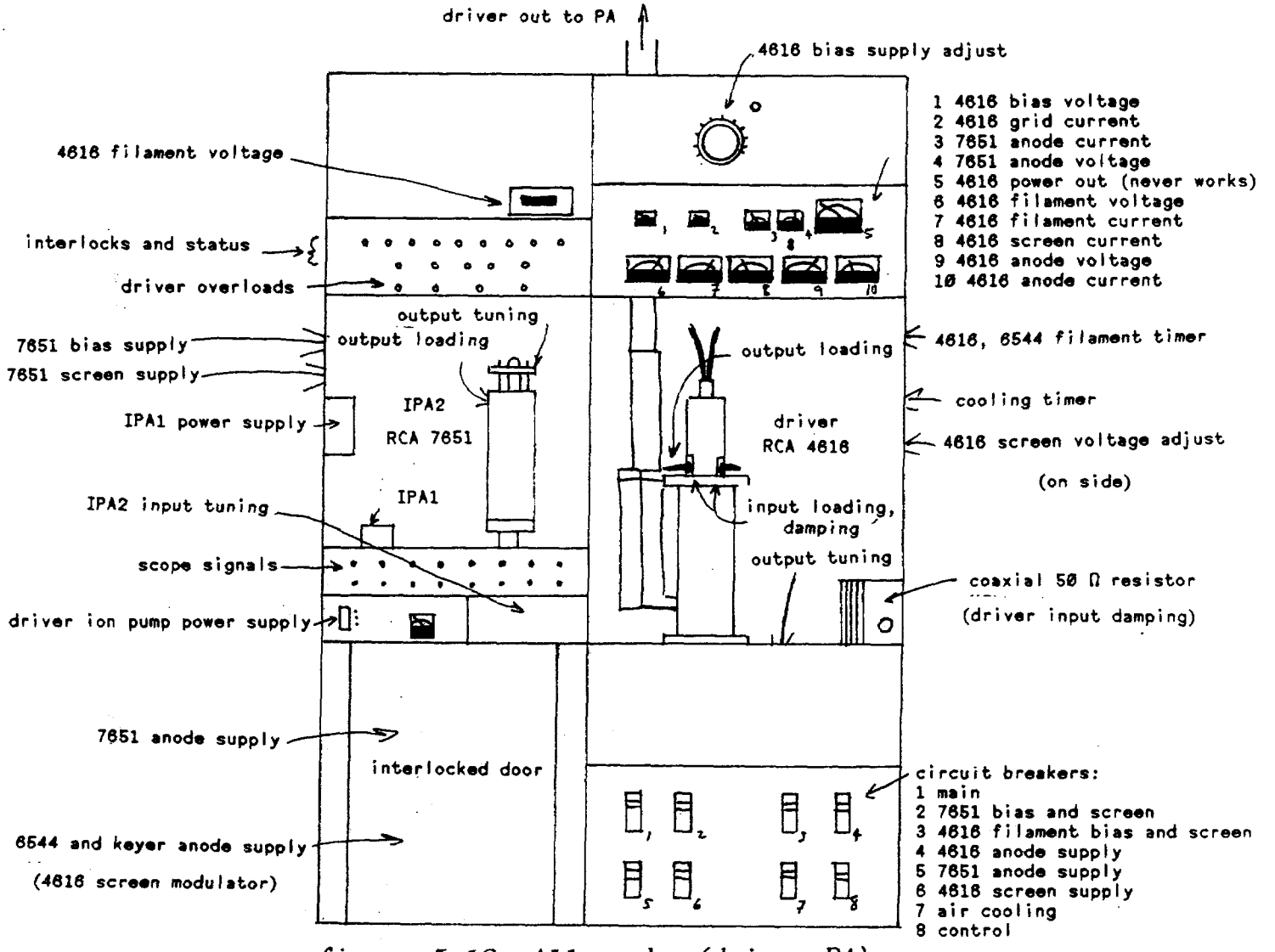

figure 5.12: All racks (driver PA)

The cavity represents a tuned L-C-R circuit that resonates at 201.24 MHz. The spaces between the drift tubes act like capacitors and the space between the drift tubes and the cavity wall acts like an inductor. When properly

tuned, the capacitive and inductive reactances cancel and the cavity looks like a purely resistive 50 Ω load. If not properly tuned at full gradient, substantial power may be reflected back through the transmission line which could damage the PA ceramic and the gas barrier by arcing across them, creating an effective electrical short.

To insure that the cavity is well tuned, the tuning slug tries to keep the PA reverse power at a minimum during beam time (sec. 5.1). An offset may work its way into the feedback loop, though, requiring some manual tweaking: placing the cavity tuner control into manual (fig. 5.13, front of stepping motor driver) run the slug in and out to zero PA reverse power during beam time. Then flip the tuner into auto and watch the reverse power. If all is well it won't move. If it does, manually tune the slug for zero reverse power again and walk around to the back of the module. Using a very small screwdriver adjust the potentiometer on the back of the frequency control and phase lock module until the FREQ INC and FREQ DEC LED's are both out. Then set the slug control back into auto. The reverse power during beam time should now stay at zero.

Permanent inhibits are indicative of problems in the PA or transmission line. After a permanent inhibit, a local reset should be done and the gradient slowly turned back up while watching for sparking in the PA and transmission line (ears may also be used) and looking for unusual vacuum activity in the form of high current flows in the cavity ion pumps. The operating impedance of the PA should be about 100 Ω, which can be calculated from the modulator peak voltage and peak current meters. A calculated value is also displayed on channel L:MDxLZ, where x is the system number. If the PA impedance is high the filament current may be raised to bring it into line (OPBULL 692). The filament current should not exceed 7000 amps without consulting a linac specialist. Note that the current readback calibration is given by a graph posted next to the control switch.

If the RF at a station is off for several minutes, the cavity will cool down and be out of tune. When turning the station back on the gradient should be raised slowly while watching PA reverse power (OPBULL 74, 596) and the position of the tuning slug (analog meter on front of the frequency control module).

An occasional PA crowbar from the RF systems is no cause for concern. If one particular station is crowbarring a lot, the usual solution is to turn down the modulator cap bank voltage a couple of kV. This voltage is controlled by a knob on the A5 rack cabinet (fig. 5.13) and read back on the PA CHARGING CURRENT meter. Cap bank voltage should not be lowered below 35 kV (49 kV for system 2) because it will get so low that the switch tubes will "max out" during the pulse (remember, the modulator regulator is trying to keep the modulator output the same) and output control will be lost. The modulator voltage waveform will become distorted if this occurs, so watch it while lowering the cap bank voltage.

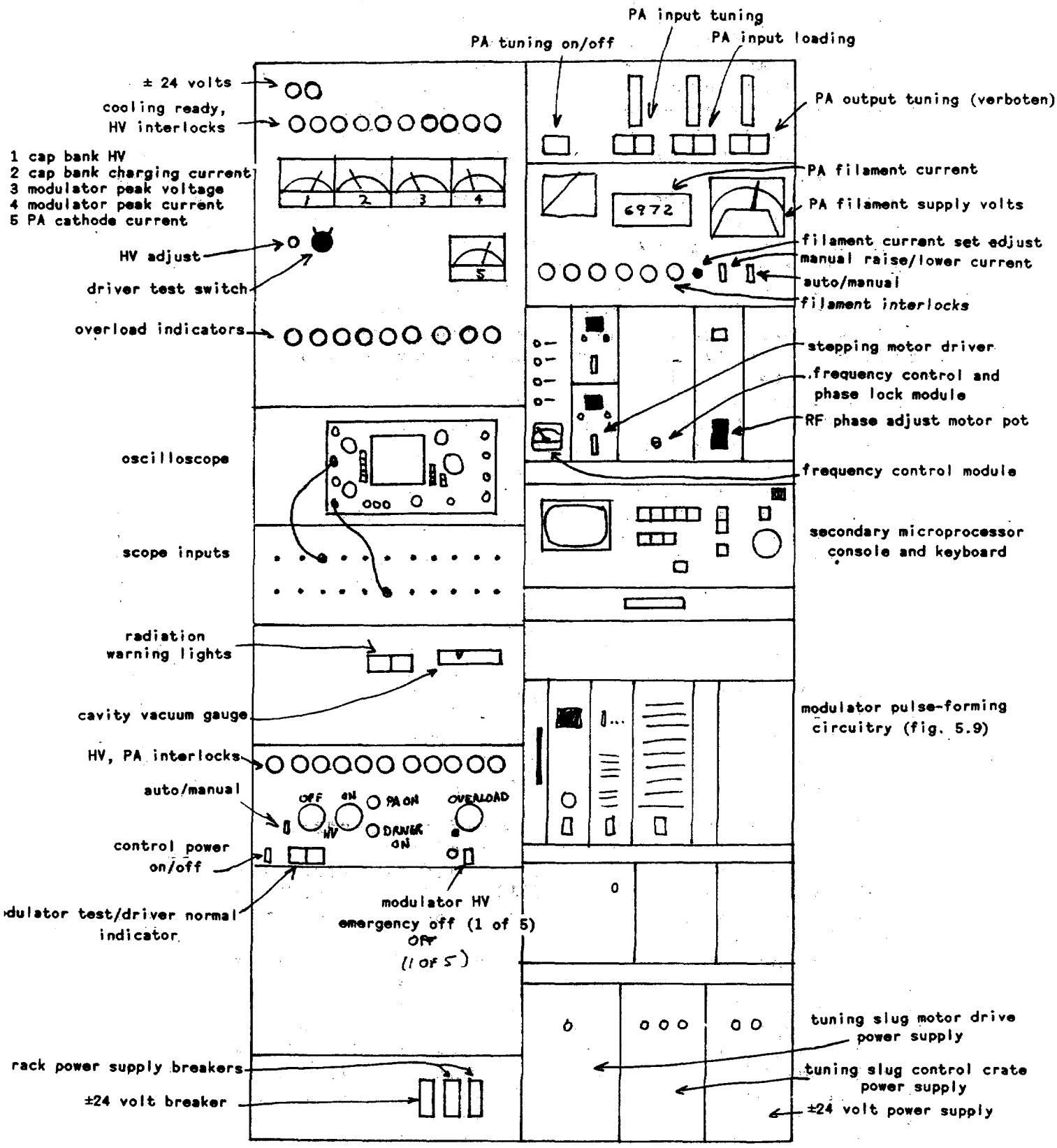

figure 5.13: A5 racks (RF system control)

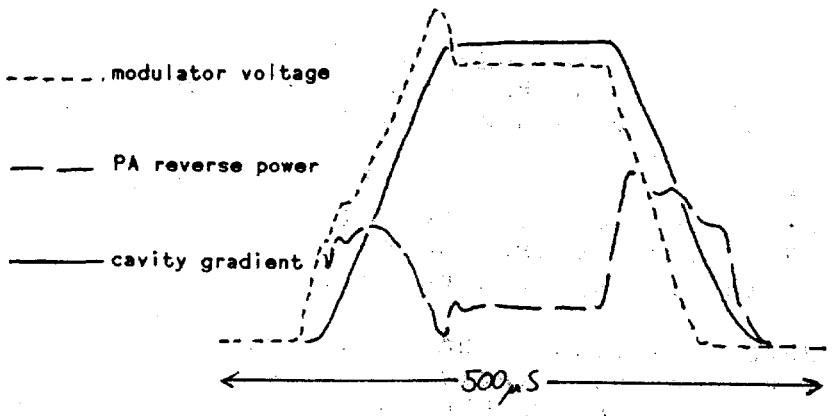

figure 5.14: typical RF system waveforms

If problems with the station persist, it may be necessary to turn the system off. The procedure is given in OPBULL 1049, and is briefly given here:

1) Turn gradient down (amplitude control module).
2) Turn modulator pulse off (waveform generator/sequencer).
3) Turn modulator high voltage off.
4) Turn EMERGENCY OFF switch to off position. This grounds the modulator's capacitor bank, first through a "soft" ground stick, then a direct short to ground.
5) Place PA filament control switch in MANUAL and lower filament current to zero with toggle switch.
6) Turn control power off.

Cooling will remain on until timers time out, unless the main breaker is shut off first. Only in an emergency should the main breaker be thrown before cooling shuts off. Note that this procedure is NOT sufficient for safety if the system is to be worked on. Linac specialists will supply further instructions if necessary.

Once repairs have been completed, the procedure for turning back on is:

1) Turn control power on.
2) Place PA filament control switch in AUTO.
3) Wait for small red light next to blue OVERLOAD button to flash. Then press OVERLOAD button. System overload status lights (top of A5 rack) should go out. PA filaments are brought up automatically if the switch is in the AUTO position, and modulator and driver will time out.
4) Turn EMERGENCY OFF switch to on position. There are actually five of these switches, and all must be on before modulator high voltage will come on. Switches are located on the A5 control panel, on the front of the modulator, on the left side of the modulator, on the crowbar rack on the right side of the modulator, and on the high-voltage rectifier in the lower linac gallery. (continued on next page)

5) Turn modulator high voltage on. Driver high voltage comes on after second IPA screen bias comes on and driver anode supply is ungrounded.
6) Make sure gradient is set to zero.
7) Turn pulse on, check for nominal driver output.
8) Turn gradient up slowly, watching tuner penetration (fig. 5.13) and PA reverse power. If RF has been off for some time, cavity will be cold and out of tune.

This procedure assumes that no difficulties are encountered in reviving the station. A description of the interlock lights is given in OPBULL 1049, but if the problem is not obvious a linac specialist should be consulted.

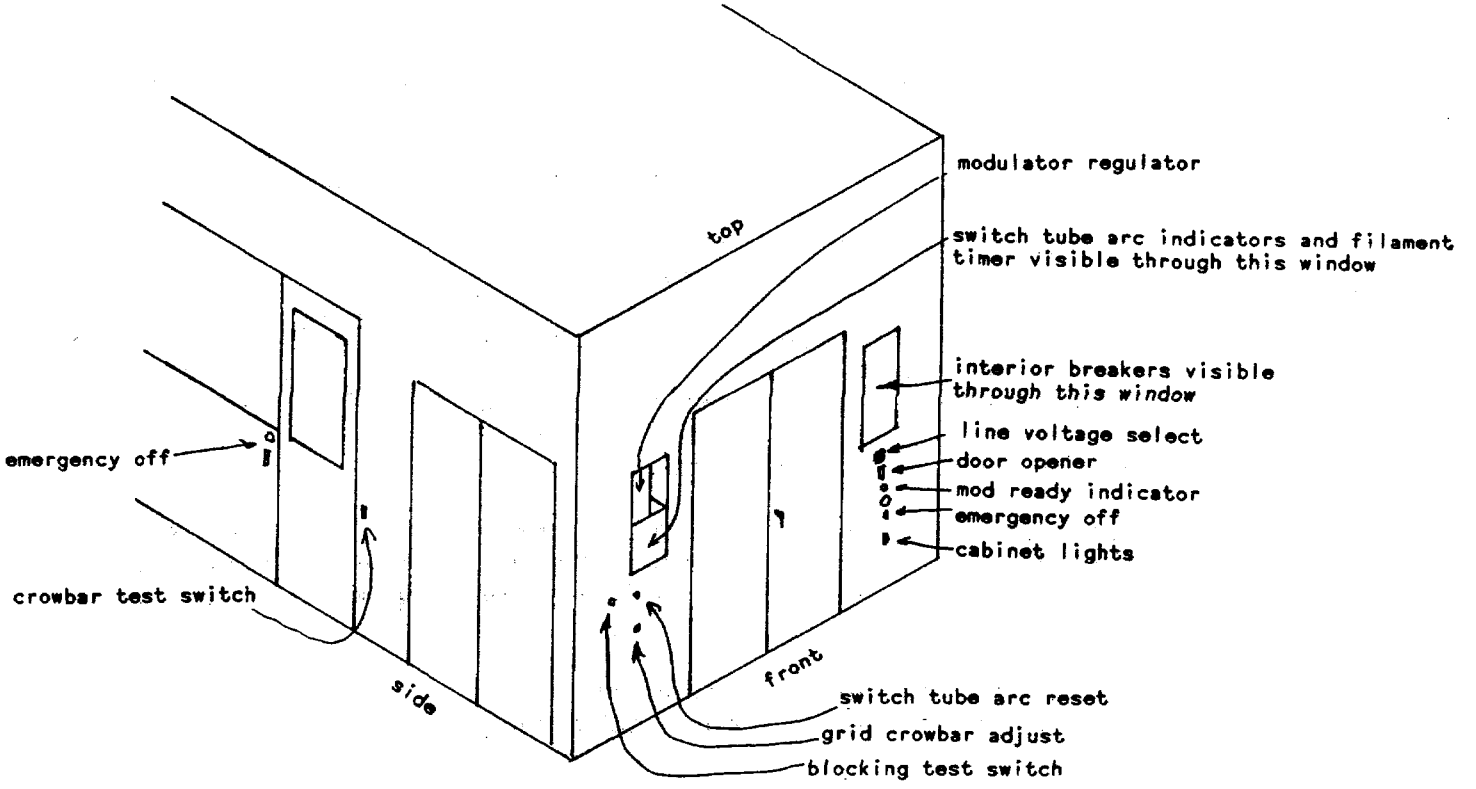

figure 5.15: modulator exterior

If the MOD READY interlock is lost, it usually means that a circuit breaker in the modulator has blown (fig. 5.15). To access the modulator:

1) Turn down the gradient and shut off the pulse and the modulator high voltage.
2) Turn the EMERGENCY OFF switches on the control panel and the front of the modulator off.
3) Press the door open button and open the front door of the modulator. There is a ground stick mounted just inside the door frame on the right-hand edge.
4) While looking away (in case there's an arc) ground out the inner box. Hang the ground stick on the inner box. (continued on next page)

5) Reset the breaker.
6) Return the ground stick to its stored position (this will close a microswitch to permit the high voltage to be turned on).
7) Close the door, turn the EMERGENCY OFF switches back on, turn the high voltage back on, turn on the pulse, and raise the gradient back to nominal.

Note that although OPBULL 220 gives directions on modulator troubleshooting, any modulator work more involved than resetting tripped breakers should be left to specialists. Modulators are dangerous!

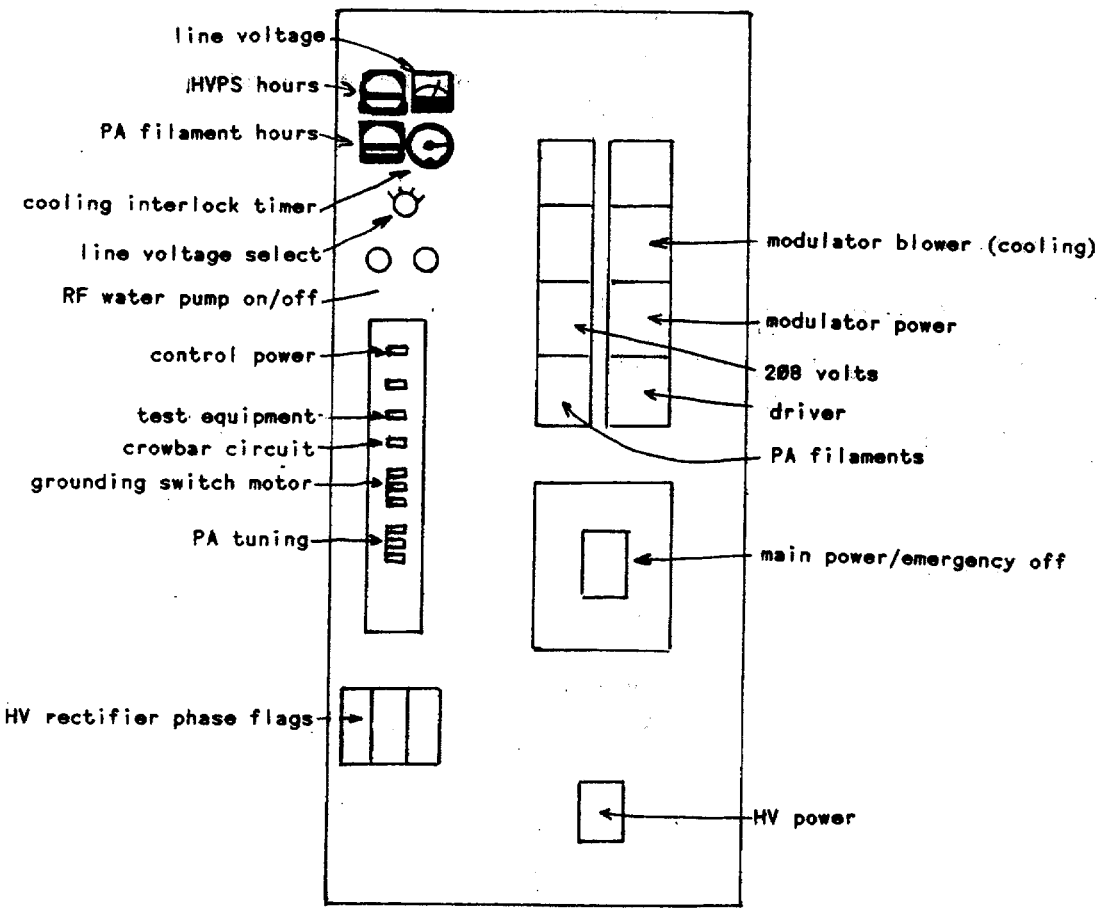

figure 5.16: A3 rack (AC power distribution panel)

If a life-threatening situation should ever arise when working on an RF system, throw the main breaker (fig. 5.16) located in the A3 racks. This breaker is bordered in red and is easy to see. Throwing it will shut down everything in the system immediately. This is a rude shock for many components, so it should be done only in emergencies.

Spare modulator pulse-forming network modules and power supplies are located in cabinets between stations 5 and 6. Other spare items (aside from the ever-ready system 10) are located in a lock-up in the lower linac gallery beneath system 1. A key is available from the key tree in the MCR.

Average values for RF system meter readings are shown here. All RF systems are slightly different, both in tune and temperament, so expect deviations from these numbers.

A11 racks:

4616 bias	200	VDC
4616 grid	30-50	mA
7651 anode	10-20	mA
7651 anode	3.5	kVDC
4616 filament	0.9	VAC
4616 filament	480	A
7651 bias	15	VDC
7651 screen	.6	kVDC
4616 screen	20-50	mA
4616 screen	1.2	kV (only works at system 1)
4616 anode	17	kVDC
4616 anode	110	mA
4616 filament	0.95	V

A5 racks:

PA high voltage	40	kVDC
PA charging I	0.85	A
modulator peak V	22-25	kVDC
modulator peak I	250	A
PA cathode I	3.1	A
PA filament V	5.2	VDC
PA filament I	6700	A

modulator:

6544 plate V	6.6	VDC
6544 plate I	0.23	A
switch tube bias	2.8	kVDC
switch tube bias	0.3	A

The FNAL 200 MeV Linac

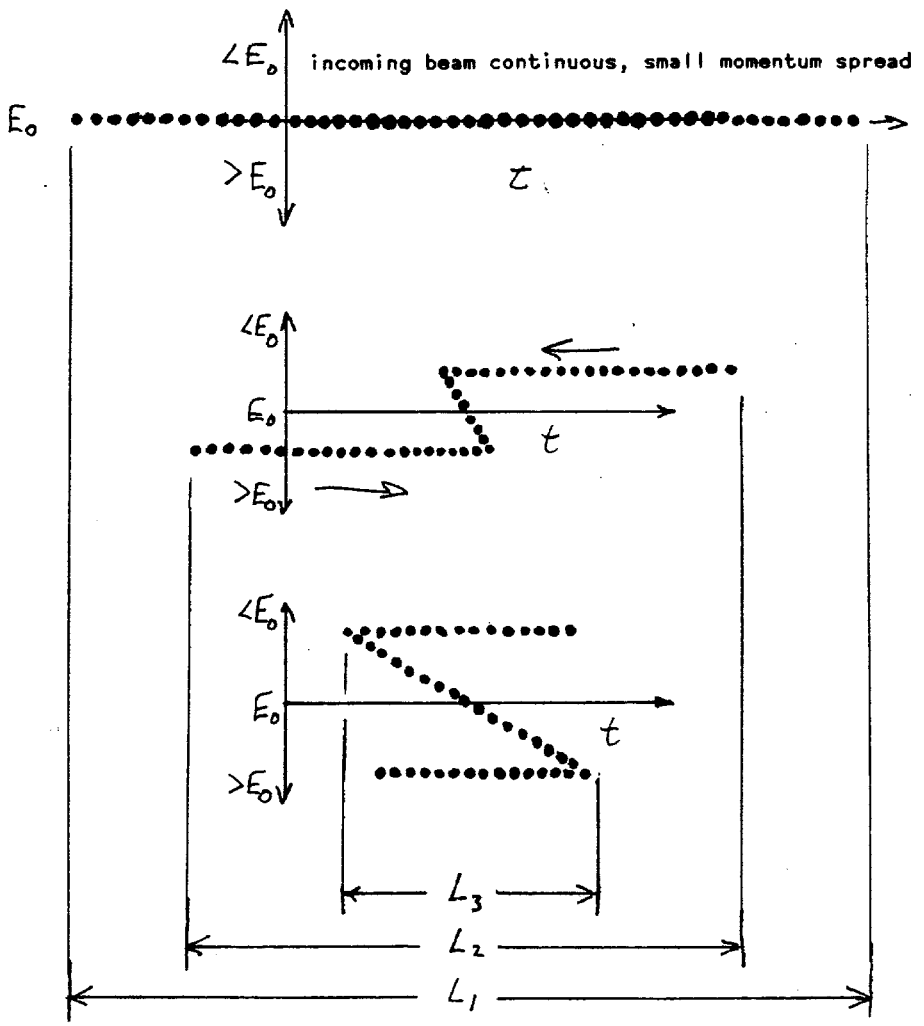

figure 6.1: buncher effect on beam energy and time distribution

6 BUNCHER

The beam pulse coming out of the sources is, depending on the chop selected, anywhere from 10 to 57 μsec in length. This corresponds to 2,000-11,000 RF cycles. As discussed previously, the synchronous phase angle of the Linac (-32°) determines the stable phase region (105°) of the RF bucket. Capturing 105/360ths of the beam thus yields a capture efficiency of about 35%, which isn't very good.

What is needed is a system that will stuff the particles into 201.24 MHz bunches so that more of them will fit into the RF buckets. This is the function of the buncher. It is a single-gap RF cavity operating at the same frequency as the rest of the linac, but phased so that particles arriving early in the RF cycle see a decelerating voltage and are slowed down, and those arriving later see an accelerating voltage and are speeded up (fig. 6.1).

The ideal buncher for injection would have a single-slope sawtooth waveform, which could bunch beam into arbitrarily small width bunches, and provide 100% capture efficiency (FN 277). This being the real world, sawtooths are difficult to produce at high powers, and so a sinusoidal waveform is used. This reduces the capture efficiency to about 70%. Still, this means the Linac buncher can cram about 240° of beam into a 105° RF bucket.

6.1 Buncher RF System

The buncher RF system, located next to system 1, is similar to the other Linac RF systems, but lacks the driver and power amplifier stages of the amplifier chain- the cavity is driven off the second IPA (RCA 7651). The RF pulse itself is more nearly square, since the much smaller cavity can fill and empty of RF more quickly.

The low-level system consists of some of the same hardware that is found in the other RF systems, as well as some older hardware, which may someday be upgraded. A block diagram is shown in figure 6.2 (compare with figure 5.1). One difference is that there are no intertank phase loops; the buncher phase is set to values commanded by the linac computer.

There are two RF phases associated with the buncher- one used for NTF operation and one used for everything else. The linac computer sends both desired phase settings to the *buncher phase select module*. When the prom module in the preacc control room sends out an NTF chop width, it also sends an NTF ENABLE pulse to the phase select module, which then selects the NTF phase for a time determined by gate pulses from a CAMAC 178 card in the lower linac gallery NTF

racks (sec. 11.4). In the absence of the NTF enable signal it reverts to the HEP phase. The phase select module is the equivalent of the RF phase adjust modules in the other RF systems.

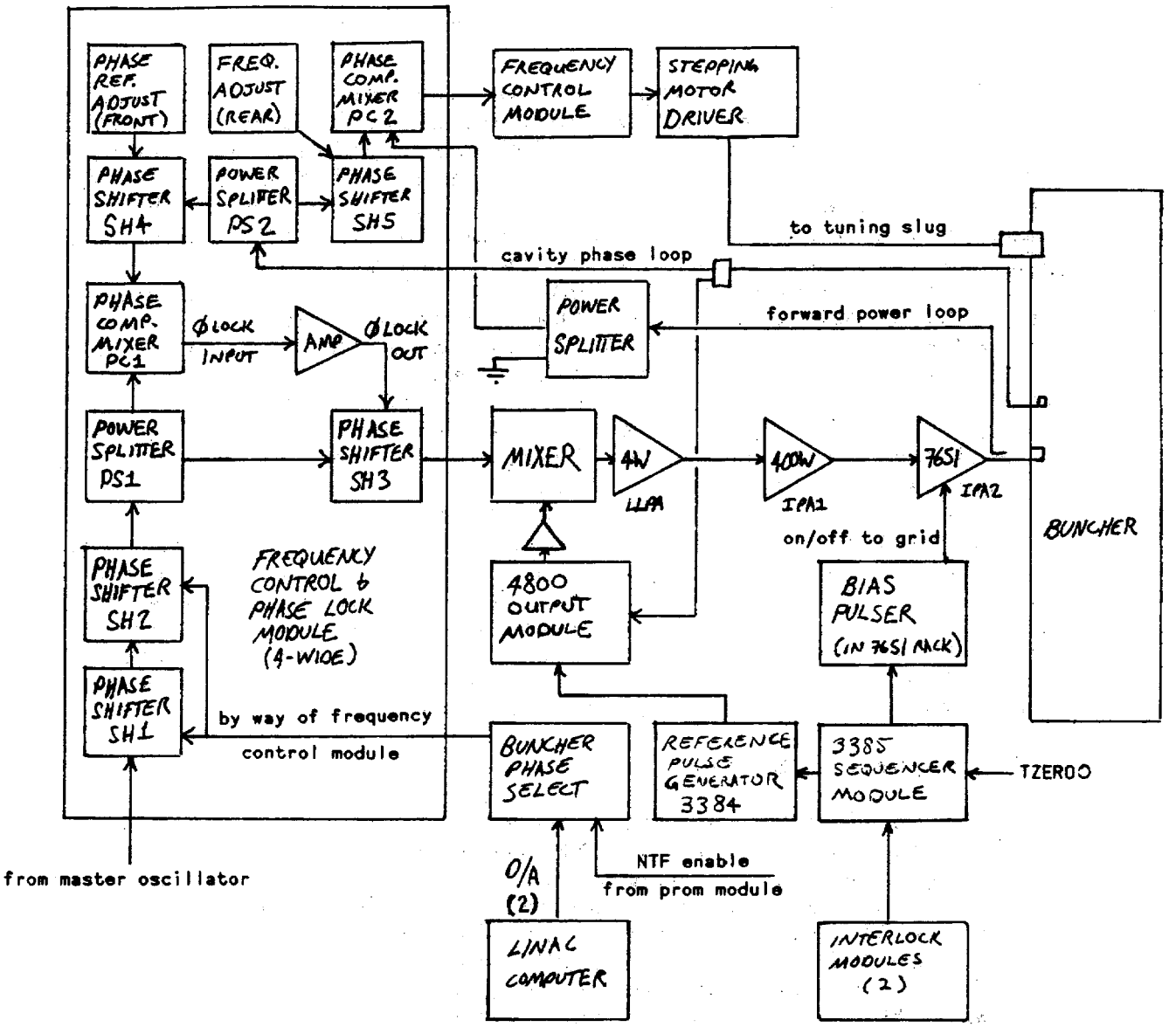

figure 6.2: buncher low-level RF system

Note that in both cases the phase is referenced to tank 1, but the actual number that represents the phase is entirely arbitrary.

Another difference is in the circuitry that forms the pulse (OPBULL 1055). The *3383 sequencer module*, when permitted by two interlock modules, generates all the system start and stop pulses, referenced to TZERO. The start and stop times sent to the bias pulser turn the 7651 tube on and off by controlling the grid voltage. Other times are used by the *3384 reference pulse generator* to produce a reference

ramp which is shaped and amplified by the *4800 output module*. The output module also sums the ramp with the actual cavity field. The output is amplified and sent to the mixer, which both gates and modulates the RF signal passing to the 4-watt amplifier.

Unlike the other RF systems, the amplitude of the buncher RF is varied by changing the size of the input to the amplifier chain, not by changing the cathode-to-anode voltage in the final amplifier.

The copper-plated steel cavity (fig. 6.3), formerly used in the University of Minnesota linac, contains two half drift tubes, drive loop, and slug tuner, all of OFHC copper. It is electrically analogous to a single cell in one of the linac cavities.

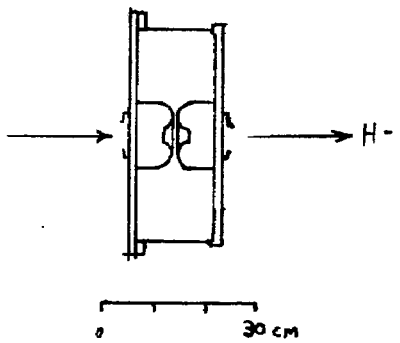

figure 6.3: buncher cavity cross-section

6.2 Buncher Operation

By the nature of its operation, the phase of the buncher with respect to tank 1 has a strong effect on linac transmission. Not only can the buncher increase the capture efficiency from 25% to 70%, it can also decrease it to 15%.

The buncher phase is a freely adjustable parameter not fixed in relation to any other system. Usually maximum transmission is desired and the buncher phase is tuned to produce maximum current at the end of tank 9 (L:T09OUT). However this has not always been the case; sometimes it is desired to keep the injector below a certain intensity while main ring or the tevatron is tuned up, but without removing a beam turn from the booster or a booster batch from main ring (usually at the request of experimenters). Then, the buncher is "phased back" to reduce the linac intensity.

It should be noted (OPBULL 1057) that changing the buncher phase changes the position and momentum of the linac beam, and thus the linac steering should be done whenever the buncher phase is changed. Usually the phase is reduced to lower the intensity, but it may also be raised past peak transmission, albeit at the risk of causing strange momentum distributions in the linac (seen as tails on the momentum

wire profile- sec. 8.3). Misphasing the buncher by large amounts is discouraged because it can cause sparking and eventual failure of booster RF stations. Once the buncher is misphased, don't forget that fact. People have tuned booster and main ring for hours on end to increase machine intensity only to discover that the buncher had been misphased earlier and had not been set back.

There are two phase adjustments for the buncher- one for the HEP, standby, and P-bar beam pulses (L:RFBPAH), and one for the NTF beam pulses (L:RFBPAN). These are the D/As sent to the buncher phase select module mentioned earlier. Separate control was given to NTF so that their beam intensity could remain constant in the face of changing requirements for linac/booster intensity. There is no reason to change the buncher phase for NTF pulses unless requested to do so by the NTF staff.

7 QUADRUPOLES

During acceleration of the beam through the linac cavities, the beam tends to blow up due to space charge effects and to a phenomenon known as *RF defocusing*. This occurs because the field lines in the accelerating gap are not parallel, but converge in the first half of the gap and diverge in the second half (refer back to figure 4.8). Since the synchronous phase angle is negative, the fields are increasing during the time of transit across the gap. Thus the diverging electric field has a greater effect than the converging one, and a net defocusing effect results.

To keep the beam size at an acceptable value the beam must be focused in both horizontal and vertical planes during its passage through the cavities. To this end each drift tube in the linac contains a quadrupole magnet, alternating vertically focusing ("D" quad) and horizontally focusing ("F" quad). There is also a quadrupole built into each end of each cavity. Thus a cavity with n drift tubes and n+1 cells has n+2 quadrupoles. The first quadrupole in tank 1 is vertically focusing.

Quadrupole focusing is critical to the proper operation of the linac, particularly in the first two cavities. If a quadrupole isn't at the correct value, the beam size downstream may become large enough to strike a drift tube and damage it. Therefore every quadrupole is monitored such that it inhibits beam if the current through the magnet is not within a 3 amp tolerance. It is NOT acceptable to run beam through the linac if any quadrupoles are out of tolerance (OPBULL 212).

A cross-section of a typical drift tube and quadrupole is shown in fig. 7.1. Both power leads and cooling water enter and exit through the drift tube stem which protrudes through the top of the linac cavity. The tops of all the drift tube stems are covered by a *stem-box cover* (fig. 7.2) through which power leads and cooling water are fed. Some covers are evacuated to forestall vacuum leaks around the drift tube stems, and in the case of tank 1, to prevent cavity tune shifts due to changes in atmospheric pressure. This is because the drift tubes can, under the influence of air pressure, expand and contract like balloons, changing the gap widths and thus the electrical characteristics of the cavity (sec. 9.2).

The quadrupoles are driven by Acme "Rectifier" supplies (OPBULL 779) located in the upper gallery (some of the supplies for tank 4 are in the lower gallery to make room for NTF equipment upstairs). Each 200 amp supply drives one quad or two quads in series (one F and one D). There are 295 quads and 171 quad supplies in the linac. All the quad supplies are individually controllable. The old *ladder control* scheme, used to conserve D/A channels, is no more, thanks to the upgraded linac control system.

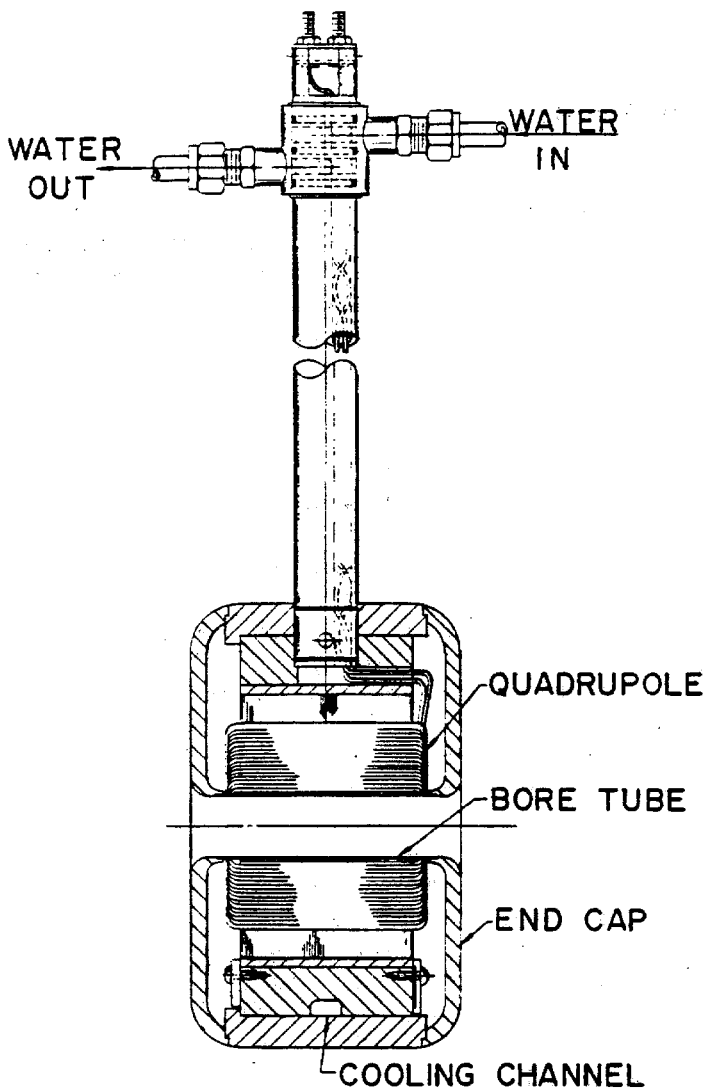

figure 7.1: drift-tube quadrupole

The quadrupole magnets are water-cooled from the same LCW system that controls the temperature of the cavity. Since the available cooling is limited, the power supplies for the quadrupoles are pulsed to reduce the duty factor. Since they are pulsed, they must be synchronized. This is done by the QUADS ON timing pulse from the preacc control room. Every quadrupole power supply is transformer coupled to the cable carrying the pulse.

In each supply, an SCR-controlled bulk supply charges a capacitor bank. The timing pulse initiates a sequence of events resulting in the discharging of the cap bank into the load about 1 msec later. The current waveform resembles a sine wave; a current tolerance of 0.5% at maximum implies a usable pulse length of 100 μsec. The current pulse flows

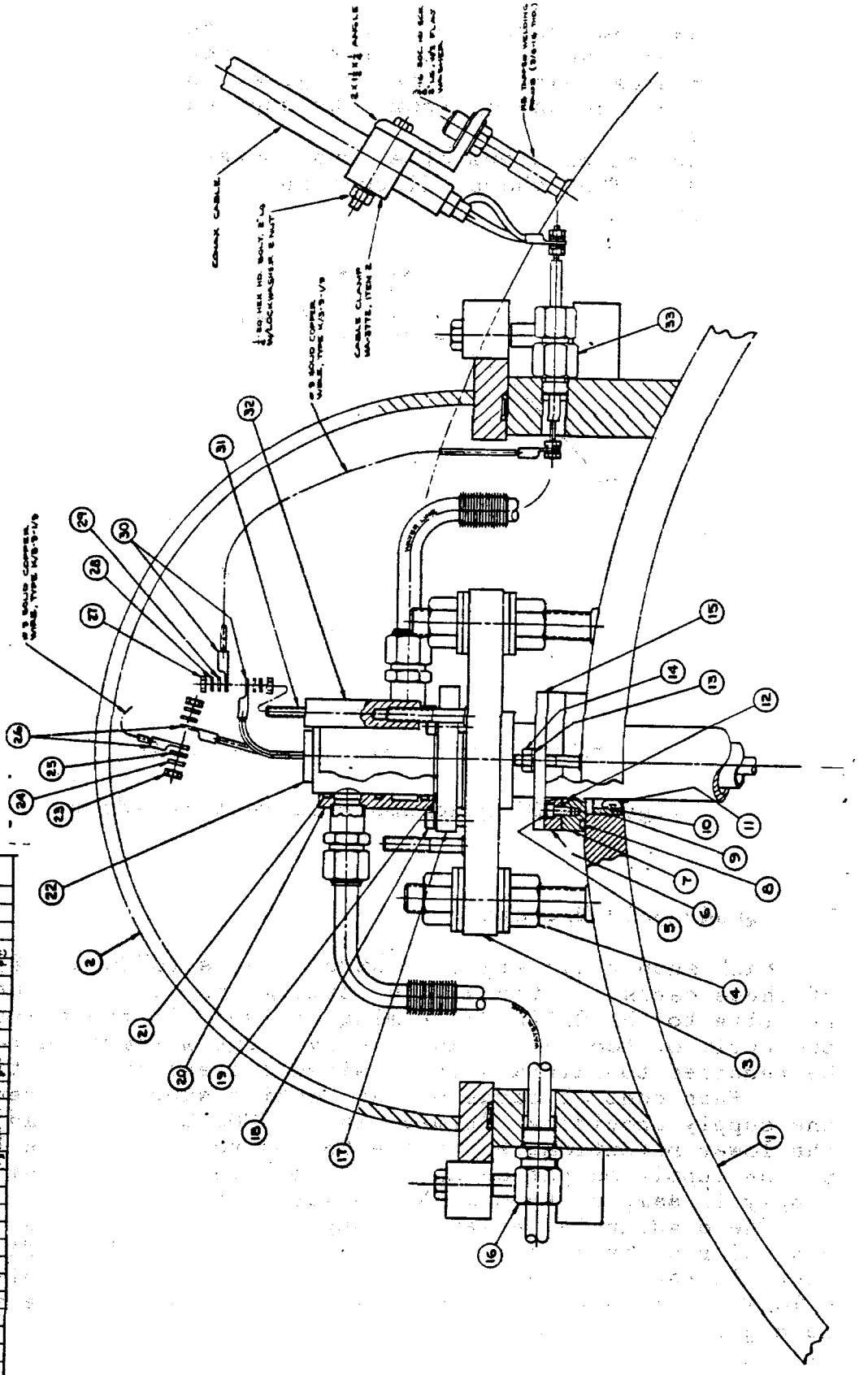

ITEM	QTY	PART NO.	DESCRIPTION
1	1		LINAC TANK
2	1	ME-4127	D.T. COVER
3	1	MC-3826 MC-3827	FLANGE SUPPORT
4	6	CL-4-SHN	SPHERICAL NUT & WASHER (CARR LANE)
5	4		#10-24 SOC. HD SCR. S.S. 3/8 LG.
6	1	MA-3824	CLAMPING RING
7	1	MA-3820	FLANGE - O RING
8	1		O RING 1/8 X 2 1/2 I.D. #230
9	1	MB-3823	R.F. CONTACT SPRING RETAINING RING
10	1		.050 DIA. COPPER WIRE 6 1/2 LG.
11	1	MB-3017	R.F. CONTACT SPRING
12	1		O-RING 1/8 X 1 3/8 I.D. #223
13	2		1/4 LOCKWASHER S.S.
14	2		1/4-20 HEX HD. NUT S.S.
15	1	MA-3818	CLAMP PLATE
16	2	GF SCU SS GF SCU SS	STRAIGHT THD. CONNECTOR (PARKER) 3/8 X 1/2 OD TUBING
17	1	MA-3825	BUSHING
18	3		1/4-20 SOC. HD SCR. S.S.
19	1	3100-163	RETAINING RING (WALDES)
20	1	MB-3821 MB-3727	WATER COLLET
21	3		O-RING 1/8 X 1 3/8 I.D. #223
22	1		D.T. ASSEM.
23	2		1/4-20 HEX HD NUT S.S.
24	2		WASHER FLAT 1/4 S.S.
25	2		WASHER STAR EXTER. 1/4 S.S.
26	2	YAMO-T3	HYLUG, 1/4 SCREW #11 TO #9 SOLID WIRE
27	2		#10-24 HEX. HD. NUT S.S.
28	2		#10 WASHER FLAT S.S.
29	2		WASHER STAR EXTER. #10 S.S.
30	2	YAMO	HYLUG, #8-10 SCREW #11 TO #9 SOLID WIRE
31	1		#10-24 STUD 1 1/2 LG. 1/4-20 STUD 1 1/2 LG.
32	1	MA-3966	TERMINAL POST ITEM 1 ITEM 2
33	2		FEED THRU CONAX EGT-128

figure 7.2: stem-box cover

through the load back to the cap bank. Additional SCRs commute after the current peak to reroute the current, charging the cap bank in the original polarity. This way, about half of the energy from the cap bank is saved for the next pulse.

The current waveform of a quad power supply is shown in figure 7.3. The sharp discontinuity is the time of SCR commutation.

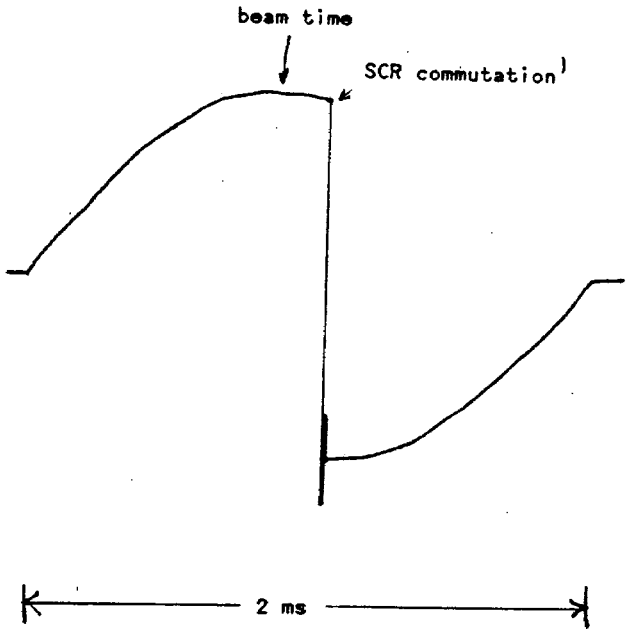

figure 7.3: quadrupole current waveform

7.1 Quadrupole Operation

Each supply has eight control cards (OPBULL 779). One of these cards controls the timing of the current pulse relative to the QUADS ON timing pulse. If the pulse comes too early or too late, an overly large maximum current may be required to maintain the desired current at beam time.

When control cards or an entire supply are replaced, the supply should be "timed in" (OPBULL 780) by adjusting the lower potentiometer on the P5 control card while looking at the supply output on an oscilloscope. The output of the supply is sampled from a BNC spigot on the front.

The quadrupole waveform may also be plotted in the control room by plotting the current versus L:TDATA, which controls the time at which the current is sampled. If L:TDATA is changed for such a plot, first disable all the auto-gradient and auto-phase loops in the RF systems (sec. 14) and turn off the beam switch. Then change L:TDATA (expect lots of alarms) for the plot. ALWAYS set L:TDATA back to its nominal value after doing such a plot, and re-enable the auto-gradient and auto-phase loops before turning on beam again.

The quadrupole currents are set and are NOT for tuning by operators. Any change in a quadrupole nominal value or tolerance should be noted in the logbook. Any change to a quadrupole setting should be referred to a linac specialist.

If all the quadrupole power supplies in a cavity trip off, it is a sure sign that the cavity water system has tripped off. If the water system cannot be brought back on quickly, it is necessary to insure that all the quad power supplies are in fact off, since an uncooled quad can burn itself up quickly (sec. 10.3). This is most easily accomplished by turning off the 40-amp wall mounted breakers, which are painted red for easy identification. Panels containing these breakers are located behind systems 1, 4, and in an office between systems 7 and 8.

8 200 MeV AREA

At the end of the linac, the 200 MeV beam can be steered into either of two beam transport lines (fig. 8.1). One line leads out of the linac enclosure down to the booster injection girder. Details of the construction and operation of this line are given in The Booster Rookie Book, Part II by John Crawford. The other line leads to the system for measuring the momentum spread and emittance of the linac beam. This system will be discussed in more detail in section 8.2.

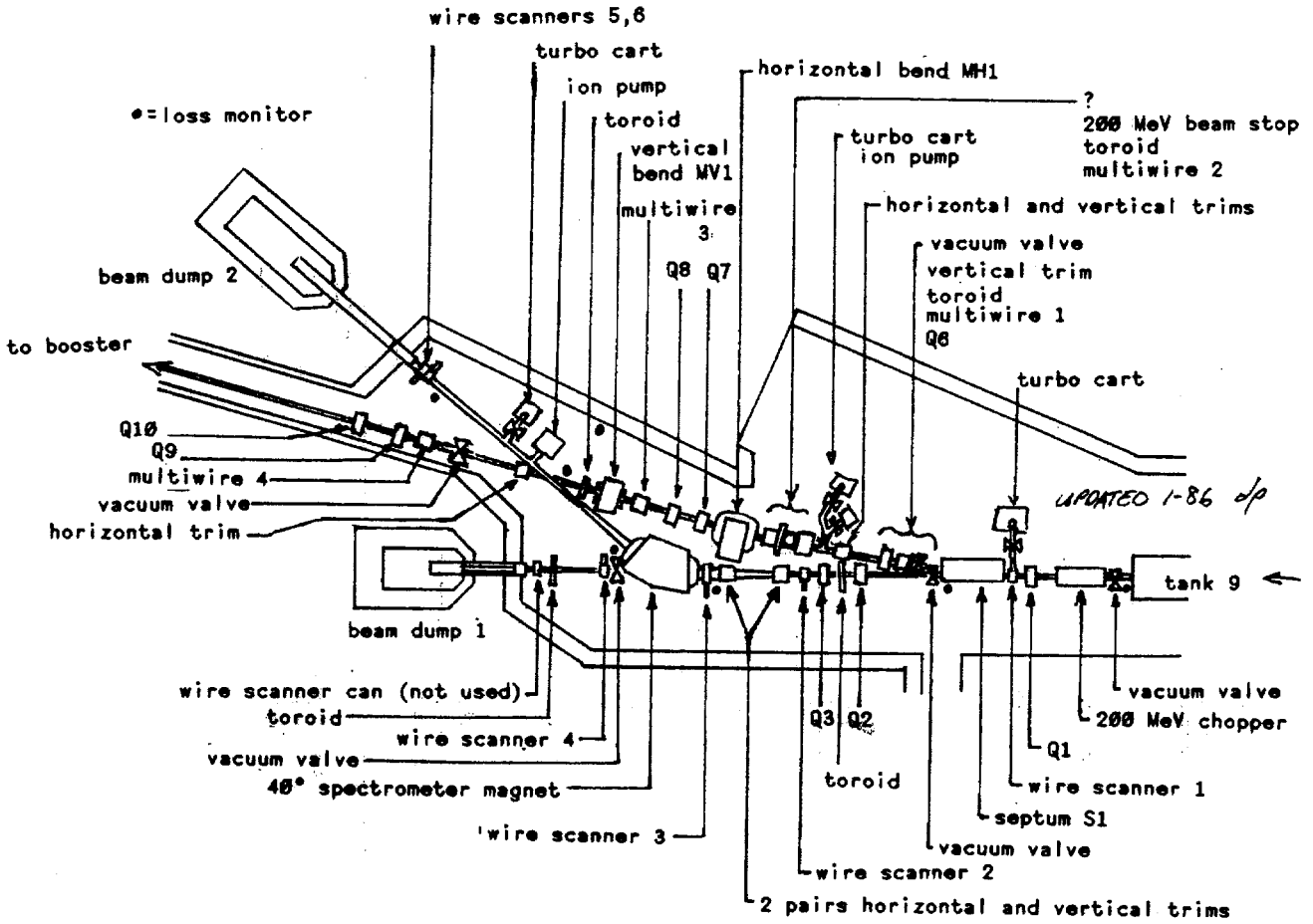

figure 8.1: 200 MeV area

8.1 200 MeV Transport Line to Booster

After leaving tank 9 the beam passes through a pulsed electrostatic chopper similar to the 750 keV choppers already discussed. The 200 MeV chopper selects beam to be sent to the booster by deflecting it into the field region of a magnetic *septum* S1 located a few feet downstream. The number of *beam turns* in booster is controlled by the width of this chop. The chopper itself consists of two plates 80 cm long separated by one inch. Both plates are charged to 56 kV before the linac pulse; the chop begins when one plate is grounded in 1 μsec via a thyratron. At the end of the chop the second plate is grounded in the same manner (fig. 8.2).

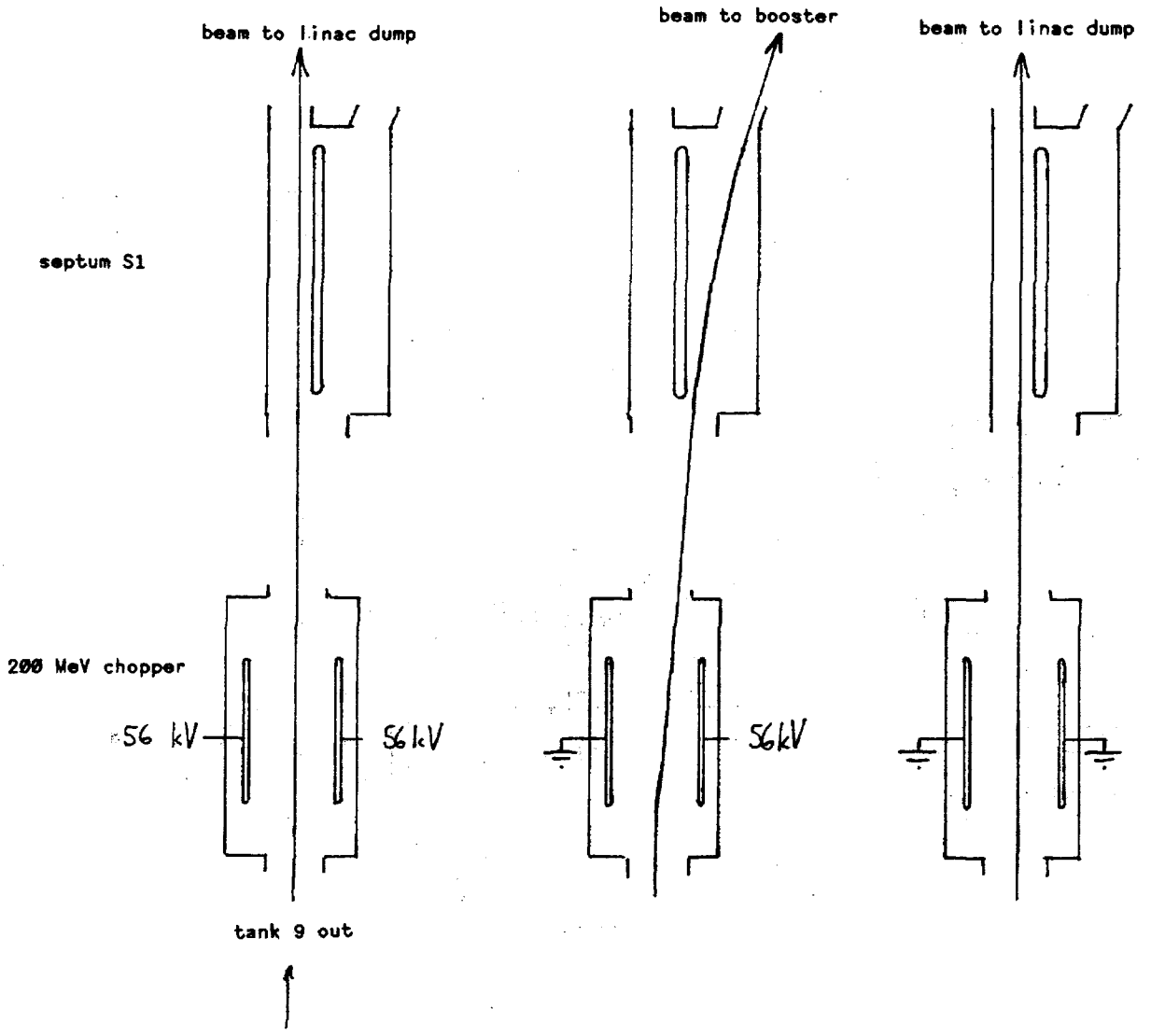

figure 8.2: 200 MeV chopper operation

To minimize the chopper voltage needed to shift the beam across the 0.2 inch thick septum plate, the last four quadrupoles in tank 9 are set to focus the beam horizontally to a 1 cm waist at the leading edge of the septum. Dipole trims upstream in the linac are set to position the beam as close as possible to the septum plate. The position and focusing of the beam are monitored by wire scanners W1 and W2 (sec. 8.3).

The magnetic septum S1 consists of an 8-turn water-cooled coil that is pulsed to 1 kA. The resultant 3 kG field bends the beam 9.7° and into the transfer line to the booster.

The chopper and S1 form the first half of an achromatic horizontal bend (OPBULL 397), the second half being provided by horizontal dipole MH1, which bends the beam another 5.9°. Momentum recombination is done with quadrupole Q6. Vertical translation of the beam from the 200 MeV area to the lower elevation of the Booster enclosure is provided by a vertical *dogleg*- two dipoles of equal and opposite bend angles. In this case a 12.8° vertical dipole MV1 bends beam down the *chute* that leads to the booster enclosure, where an identical dipole MV2 renders it horizontal again. This vertical translation is also designed to be achromatic by appropriate settings of quadrupoles Q9-12. A third achromatic set is a horizontal translation and angle change (MH2, S2, and quads Q20-26). Quadrupoles Q7 and Q8 are used for matching between the horizontal and vertical bends.

The achromaticity of the 200 MeV line is dependent on the settings of the quadrupoles, which in turn depend on the line geometry as well as the alignment of the quads with respect to the beam center. These are not variables. Thus quadrupoles in the 200 Mev line, unlike those in the 750 keV line, are NOT intended for casual tuning.

The 200 Mev chopper, S1, major bending dipoles and quadrupoles are monitored not by the linac control system, but by the booster control system.

8.2 Momentum and Emittance Analysis Lines

The beam not selected to go to the booster passes undeflected through the chopper and S1 and on to the momentum/emittance measuring system. Momentum is measured by bending the beam through a 40° *spectrometer* magnet and measuring the beam width downstream with the horizontal wire scanner W5 (fig. 8.3), placed at one *object* of the spectrometer magnet. The spectrometer magnet has a good field width of 10 cm. Quadrupoles Q2 and Q3 are tuned to make the beam nearly fill the horizontal aperture of the magnet; this increases the resolution of the momentum measurement to a theoretical 0.1% by increasing the *dispersion* at W5.

In normal operation the spectrometer magnet runs DC. Any shift of the beam position at W5 is interpreted as a

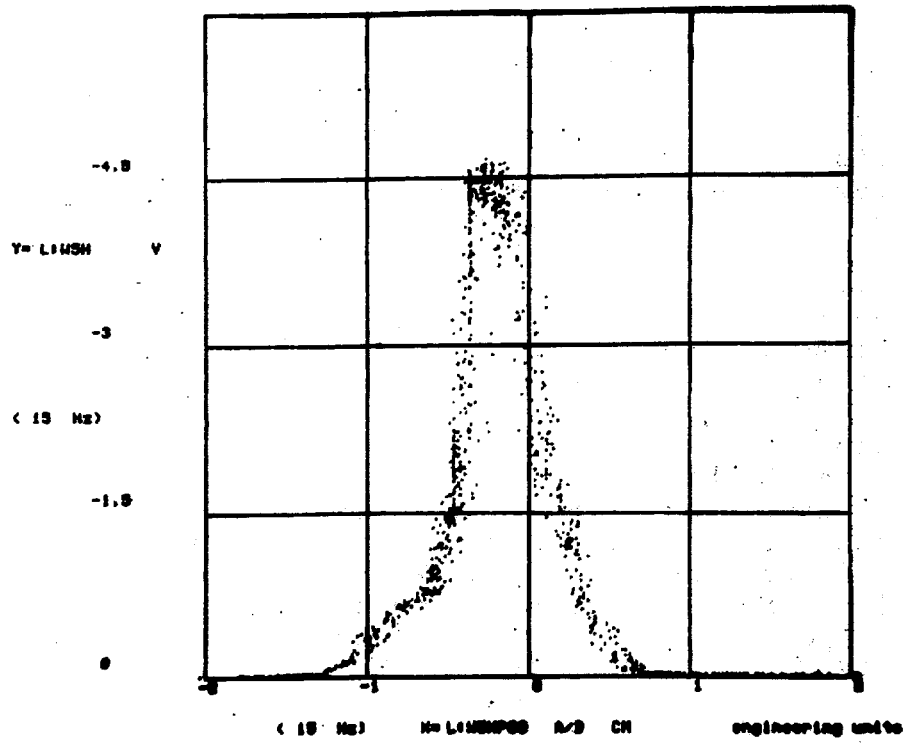

figure 8.3: linac momentum scan

change in linac momentum (see below).

The spectrometer magnet field is measured by a Hall probe; the output of this probe in volts (seen on the 8-GeV TV system, channel 8) is summed with the input D/A from the computer to produce a drive signal to run the supply. A second, less powerful loop regulates the supply voltage to prevent long-term drifts. Nevertheless, after the spectrometer is turned off for any length of time, it may take about 24 hours to get back to good regulation (the future addition of an NMR probe and another feedback loop may help).

Emittance measurements are usually made only during linac studies. For these measurements, the spectrometer magnet is turned off and the currents in Q2 and Q3 are changed to focus the beam to a waist inside a "straight through" pipe that passes through the spectrometer magnet yoke. Data from simultaneous scans of wires 200-2, 200-3, and 200-4 are used to calculate the beam emittance.

The beam dumps at the end of the momentum and emittance measurement lines are buried in the dirt outside the linac enclosure. Each is a 3 ft diameter steel casting coated by 1.5 ft of concrete. The front face of the steel casings are sloped 3° with respect to the beam axis to distribute the beam energy over a wider area. The casing in the momentum analysis dump is 9 ft long, weighs 15 tons, and is designed to dissipate 3-10 kW. The casing in the emittance measurement dump is 6 ft long and can dissipate 0.3-1 kW.

8.3 Linac Steering and Momentum Analysis

Proper operation of the 200 MeV transport line assumes a specific beam position and angle at the entrance to the

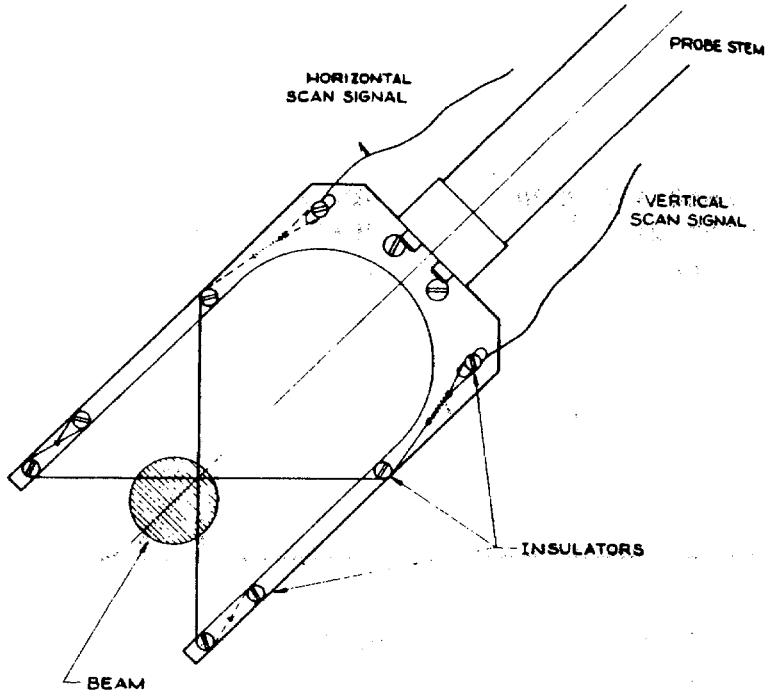

figure 8.4: 200 MeV wire scanner probe

line. To this end scanning wires W1 and W2 have been aligned such that nominal beam position is at the center of the wires. The position is adjusted by two sets of horizontal and vertical dipole trims located between tanks 6-7 and 7-8. Adjusting these trims to center the beam is known as doing the linac steering.

The steering can be done by manually running in the wires, but is usually done by an ACNET applications program on page L36 (sec. 14.2). This program will automatically run the wires through while running 15 Hz beam. The *centroids* of the beam in both planes are measured (fig. 8.5), and the dipole adjustments that will center the beam are calculated.

Linac steering should be done before any 200 MeV line tuning, before and after any 750 keV line tuning, and once per shift, just for grins.

Momentum analysis is simply a matter of running wire W5 (horizontal) across the beam and observing the beam profile. A change the peak position by 1 cm corresponds to a momentum shift of 1.4 MeV/c (OPBULL 718). The typical momentum spread of the linac is 0.4%; it can be reduced to 0.2%, but doing so degrades the efficiency of the 200 MeV debuncher and hurts booster injection efficiency.

When the beam profile on W5 shows a shift from center, the RF cavity gradients are checked for excessive beam loading. If none is found, and all gradients and intertank phases are at nominal values during beam time, then the linac steering is done. If the beam profile at W5 is still off center, then the field in the spectrometer magnet is changed to center it, and a note is written in the logbook.

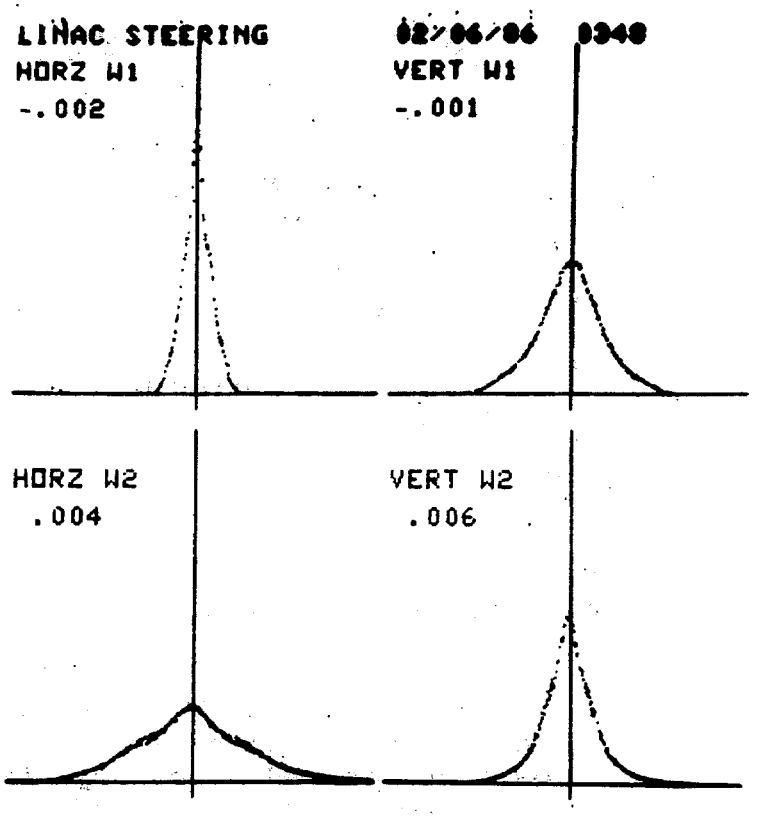

figure 8.5: linac beam profiles at steering wires

9 VACUUM SYSTEMS

Maintaining vacuum in the linac transport lines and cavities allows the ion beam to travel through the machine without interference from gas molecules. Vacuum also acts as an electrical insulator, allowing high potentials between objects (such as drift tubes) without arcing. Vacuum in the linac is typically 10^{-7} torr or better. Such low pressures are the domain of the sputter ion pump, which uses electrons to ionize gas molecules. Ions are captured on an anode and complete an electrical circuit. The rate at which ions are hitting the anode is an indication of the absolute gas pressure. Ion gauges, which measure low pressures, work on the same principle. Potentials across the cathodes and anodes in ion pumps and gauges are in the range of several kV.

The ion pumps in the linac are the diode type with titanium anodes. Titanium is good at catching gas molecules, although the anodes wear with time and may eventually have to be replaced, depending on vacuum conditions. Anodes last anywhere from six months to indefinitely.

All the ion pumps in the linac are made of a number of small modules ganged together. The Ultek pumps are made of 25 liter/sec modules and the Varian pumps are made of 30 liter/sec modules.

All the vacuum valves in the linac are electrically controlled and pneumatically operated. Solenoids direct the flow of nitrogen gas that moves the valve actuators. The nitrogen comes from a header that runs the length of the linac; this also supplies gas to pressurize the PAs and transmission lines. Nitrogen is supplied by two LN_2 dewars located at the Central Utility Building (CUB). If the nitrogen supply runs out, all the vacuum valves in the linac will close.

9.1 750 keV Area Vacuum

The vacuum for the 750 keV area is maintained by the Ultek 2400 liter/sec (5000 liter/sec for hydrogen gas) ion pumps at the head of each column, and by the linac cavity pumping systems. The ion pump power supplies are located in relay racks in the preacc control room. Valve interlocks in this system are described in section 2.

Column vacuum is read out in torr on an *ionization gauge controller* mounted in the rack above the ion pump supplies. This meter changes scales (powers of ten) automatically, with an audible "click".

9.2 Cavity Vacuum

Vacuum inside the accelerating cavities is maintained with ion pumps. Each tank has two pump power supplies LEE (low-energy end) and HEE (high-energy end). Each supply powers three Varian 1000 liter/sec ion pumps mounted along the bottom of the tank, which pump directly on the cavity through slots in the cavity floor. The pumps on a common supply are wired in parallel, so the current being drawn by each pump is roughly the supply current divided by three. The ion pump power supplies are located in the racks behind the A5 control console at each station.

Tank 1 is an exception to the above in that it has four ion pumps along the bottom of the cavity instead of six. Each power supply thus feeds only two pumps. Tank 9 has two Varian pumps and two Ultek pumps of 1200 liter/sec capacity, with the other two pump ports blanked off. Two Ultek pumps are available for these ports but are usually held in reserve. The Varian and Ultek pumps have slightly different power supplies.

Each tank has a vacuum valve at each end, except tanks 1 and 2, which are so close together that there isn't room for valves in between- thus tanks 1 and 2 have a common vacuum system.

The upstream vacuum valve for tank 1 is the Linac valve mentioned in the 750 keV section. It is interlocked to the ion pump power supplies in tank 1 such that if both supplies trip off, the Linac valve will close. The HEE valve in tank 2 is likewise interlocked to the pump supplies in tank 2.

In all other tanks, the vacuum valves at each end of a tank will close if both of the pump power supplies for that tank trip off. Each power supply is set to trip if the combined pump current for that supply exceeds 200 mA.

Status of the vacuum valves is monitored by the computer as digital status and the closing of any valve will inhibit beam. Remote control of the vacuum valves is available through the control system (sec. 14.1).

Each ion pump supply has a vacuum monitoring gauge mounted in the rack next to it. This gauge uses the pump supply current to provide its vacuum reading, not an actual gauge (there are none mounted in the cavities). Despite appearances, the gauge does <u>not</u> control the valve. The valve controller (fig. 9.1, OPBULL 416) shows the status of the power supply interlock for each valve, the status of each valve, and provides local control. (Also known as the *gate valve controller*.)

The rear of the crate that holds the vacuum gauge and valve controller also is also connected to the *linlock* vacuum valve status line. This is simply a line coming from a 5-volt power supply in system 9 that is daisy-chained to all the valve controller crates. The line runs to the prom module in the preacc control room, where it forms the LINAC VACUUM VALVE input. When a valve closes, the appropriate valve controller drags this line to ground, inhibiting the BEAM ENABLE output of the prom module to the pulse shifter and thus inhibiting beam.

The ion pump power supply provides the voltage (2-8 kV) necessary to produce the electrons that ionize gas molecules. The meter on the front panel of the supply can read pump current (usually given in milliamps), or the supply voltage. At normal operating pressures (10^{-7} torr) the current and voltage have the usual inverse relation: as the pressure rises the current increases, and the voltage drops. In these ranges the current is the best indicator of the actual vacuum. At relatively high pressures (10^{-3} torr, or below 3 kV), the current stabilizes as the voltage decreases; voltage is then the best indicator of vacuum. There is a function of the meter to show the vacuum value directly but it is of doubtful accuracy.

The most accurate method of determining the cavity vacuum is by reading the pump current, dividing it by the number of pumps it drives, and looking up the equivalent vacuum value on a chart posted on the side of the rack.

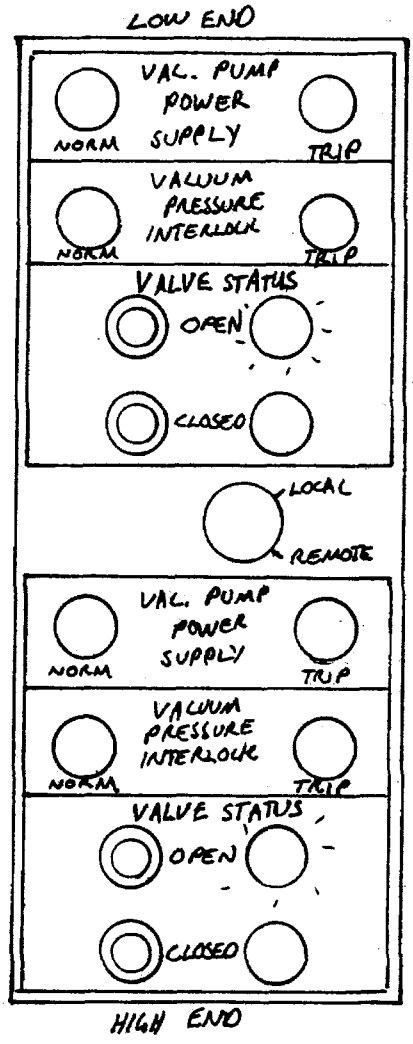

figure 9.1: cavity vacuum valve controller

The ion pump power supply voltage is monitored as analog channels L:TKxIPL and L:TKxIPH, where x is the system number; unfortunately, these don't seem to work.

In addition to the main ion pumps for cavity vacuum, tanks 1, 4, and 7 also have small roughing pumps that keep the drift tube stem-box covers under vacuum. These pumps run continuously and are not monitored in any way.

The one-piece stem box cover for tank 1 is kept evacuated to prevent air pressure inside the drift tubes from distorting the drift tube geometry and changing the resonant frequency of the cavity. Although this sounds farfetched, this effect has produced frequency shifts of greater than 10 kHz. This is enough to range out the cavity tuning slug. Therefore, if the tuning slug ranges out and there is no problem with the cavity temperature, the next thing is to peek through the gate to see whether the roughing pump on the stem box cover is still running.

Tanks 4 and 7 have long-standing vacuum leaks around one or more drift tube stems, and the stem-box cover is evacuated with small roughing pumps to help maintain cavity vacuum. If these pumps trip the cavity ion pumps may eventually load down and trip.

The stem-box covers for the other linac tanks can be pumped if necessary but usually remain at atmospheric pressure. The covers for tanks 2-9 are in six sections each, with a vacuum pump port on the top of each section.

The linac tanks are made of three sections welded together end-to-end. The weld joints can develop leaks, so the design of the tank includes *belly pans*; these are small volumes that may be pumped on to keep the area outside of the weld under vacuum. Tank 3 has a leaky weld, so another roughing pump is devoted to pumping out one of the belly pans on this tank.

After major work on a cavity is completed, some provision must exist for pumping a cavity back down to the point where the ion pumps can handle the load. This is done with large pump stations consisting of a vaned roughing pump and a two-stage Roots blower. These are connected to the tank for initial pumpdown and may be removed for normal operation. Two of these stations are mobile and can be moved up and down the linac to the required location. A third is permanently affixed to tank 2. These stations are locally controlled and are not monitored.

9.3 200 MeV Area Vacuum

A map of the 200 MeV vacuum system is shown in fig. 9.2. Vacuum is maintained by ion pumps located underneath the chopper, near Q6, and in the line leading to beam dump #2. More pumps exist downstream of this area in the booster enclosure, but that is beyond the scope of this document. The ion pump near Q6 is separated from the beam pipe by a vacuum valve, but the other two are connected directly to the pipe. In addition to the ion pumps, *turbo carts* can be

valved in to assist in pumpdown. Turbo carts are roughing pump/turbo pump combinations that are manually valved in and out, as well as manually operated.

Vacuum isolation valves provide the ability to work on a part of the 200 MeV transport lines without having to let the entire vacuum system up to air. These valves (VL-T9, VL-S1, VL-02, VL-DMP, and VI-Q9) can be remotely controlled from a rack located in the booster gallery just downstream of linac system 9.

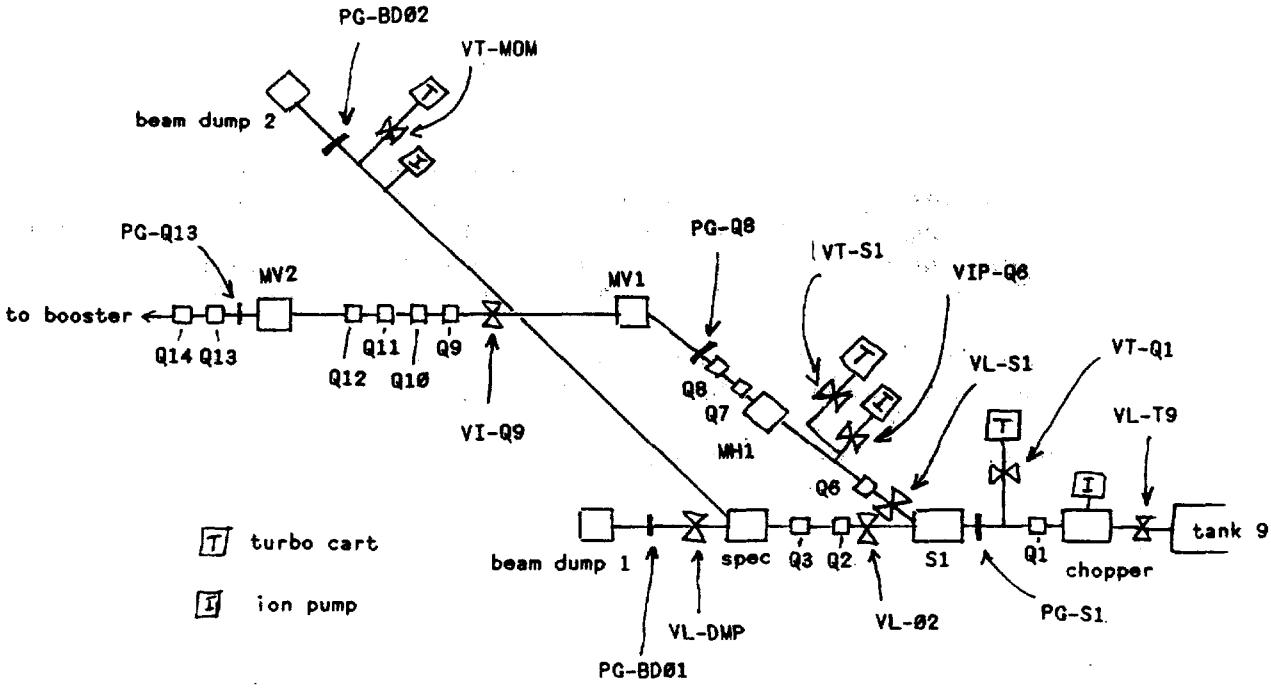

figure 9.2: 200 MeV vacuum layout

Vacuum is monitored in the 200 MeV area by a number of *pig gauges* that operate on the same principle as ion pumps. The readbacks for gauges PG-S1, PG-BD01, PG-BD02, PG-Q8, and PG-Q13 are in the same rack as the isolation valve controllers. These provide vacuum readings to control the interlocked vacuum isolation valves. When the pressure, as measured by the gauge, increases from the normal 10^{-6} torr to about $5x10^{-4}$ torr, the valves connected to that gauge will close (OPBULL 29, 513). Valves VL-T9 and VL-02 are connected to gauge PG-S1. Gauge PG-Q8 is connected to valves VL-S1 and VI-Q9. VI-Q9 is also connected to gauge PG-Q13. The status of all the isolation valves, turbo cart valves, and pig gauge status (OK/BAD) is monitored by the booster control system.

In the event of a power outage, or any case where the vacuum is too poor to be able to use the ion pumps, it is necessary to use the turbo carts (OPBULL 267). The procedure is as follows:

1) If beampipe is up to air, open valve between beampipe and turbo cart first. If vacuum is only moderately bad, leave it closed. Start roughing pump.
2) When vacuum gets down to 30" (as indicated on cart) start turbo pump. Wait five minutes.
3) Open valve between turbo cart and beampipe.
4) When vacuum gets down to 5×10^{-4}, start ion pumps, turn on pig gauges.
5) When ion pump voltage gets above 4.5-5 kV, valve out turbo cart. Turn turbo off, wait for it to spool down, turn off roughing pump.

9.4 NTF Vacuum

The NTF (sec. 11) vacuum system is quite simple. There is a single vacuum valve in the beamline just after the 58° bending magnet. The vacuum is continuous all the way to the beryllium target. The valve is interlocked to an ion gauge in the beamline, but not to linac vacuum. The gauge readout and valve controller are found behind the A5 racks for RF system 4.

There are no pumps in the NTF beamline itself, but a *foreline* runs upstairs to a roughing and turbo pump station behind the rack that contains the valve controller. The turbo pump runs continuously.

10 WATER SYSTEMS

Conventional high-power electrical devices, like those found in the linac, produce a good deal of waste heat. To keep components at operating temperatures many linac devices are cooled using water that has been specially treated to reduce the number of free ions and thereby lower the conductivity. The *LCW* (Low Conductivity Water) systems are treated, temperature-regulated, and pressurized at the Central Utility Building.

Two separate LCW systems service the linac: the 95° system and the 55° system. Cooling for NTF power supplies, magnets, and target, and all the 400 MeV devices is provided by the 95° system. Devices cooled by this system connect to the supply and return headers through hoses or copper tubing, and thus rely on the proper supply and return pressures, as well as temperature, to provide sufficient cooling. This system typically runs at about 85° F, with supply and return pressures of 110 and 20 psi, respectively.

The preaccelerators, 750 keV line, RF stations, tank quadrupoles and cavity walls are cooled indirectly by the 55° system. For these systems a number of closed-loop pumping stations exchange heat with the 55° system to regulate system temperatures, but do not draw water from the 55° system continuously.

Three types of modular LCW pumping stations are used in the linac. Two preaccelerator pumping stations of the first type service the column water resistors, Haefely power amplifiers and 750 keV transport line elements. Each linac cavity has one of each of the other two types of water station: the RF water systems provide cooling for the components of the RF systems, and the cavity water systems provide cooling and precise temperature control of the cavity walls and drift tubes.

The 55° LCW system typically runs at 52° ±4° F. The supply and return lines from CUB enter the lower linac gallery between systems 5 and 6. The remote readback for the temperature is behind system 8, and the pressures are monitored behind system 5.

Maintaining proper temperature in the 55° system is vital to linac operation, as are supply and return pressures (150 and 50 psi, respectively), and, to a lesser extent, conductivity (1.1 μmho/cm or less).

All the linac cooling systems are closed systems that exchange heat with the 55° system to regulate their temperature, and top off their volume with water taken from

the 55° system when necessary. Each has its own heat exchanger, temperature regulator, pump, deionizer bottle, and reservoir. Temperature regulation is achieved by varying the 55° water flow through the heat exchanger to keep the return water temperature constant. In order to operate, the systems must have primary cooling water present in the heat exchangers and sufficient reserve levels in the reservoirs. All three types of systems are located in the lower linac gallery.

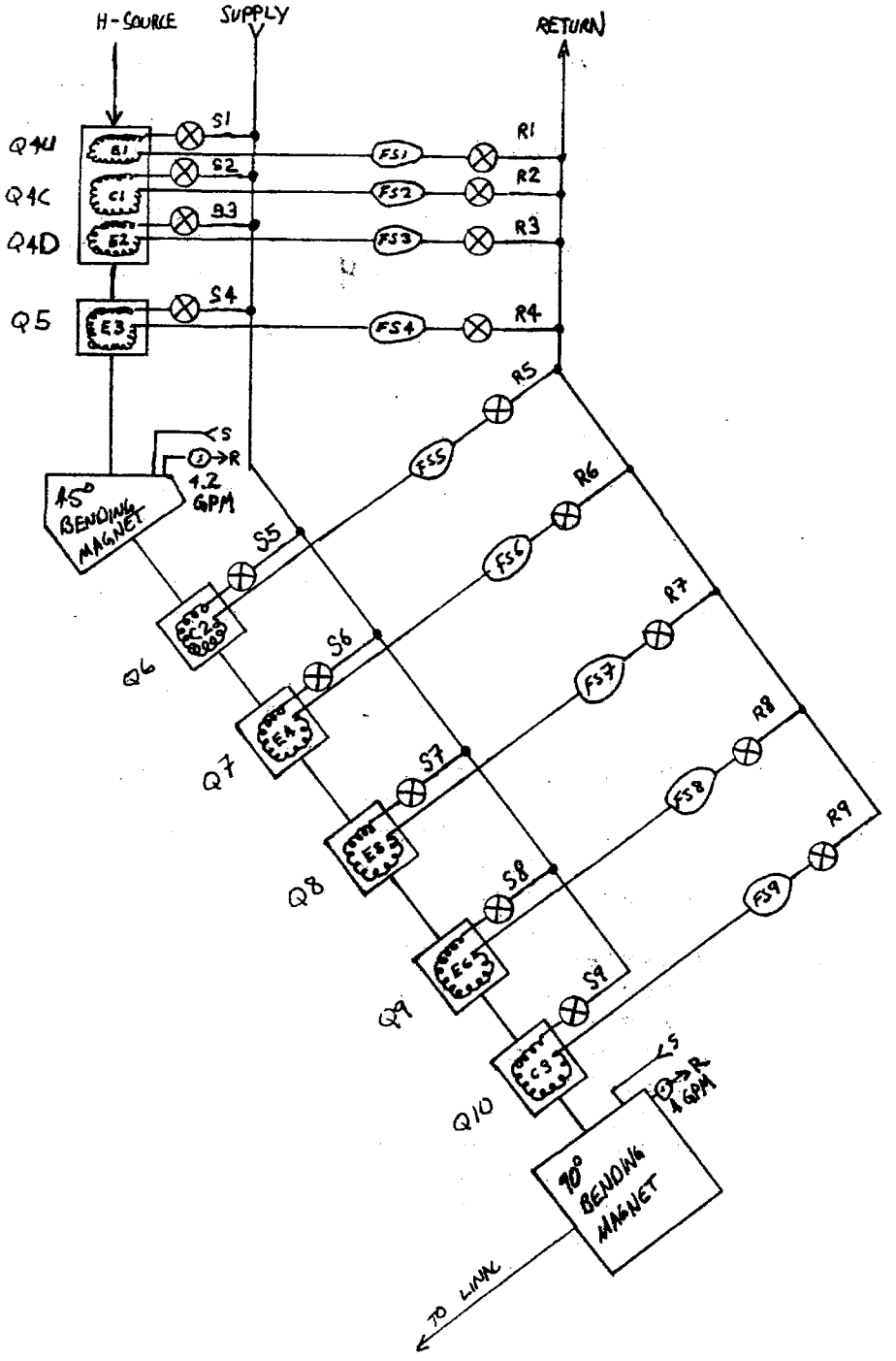

figure 10.1: H- 750 keV line water system

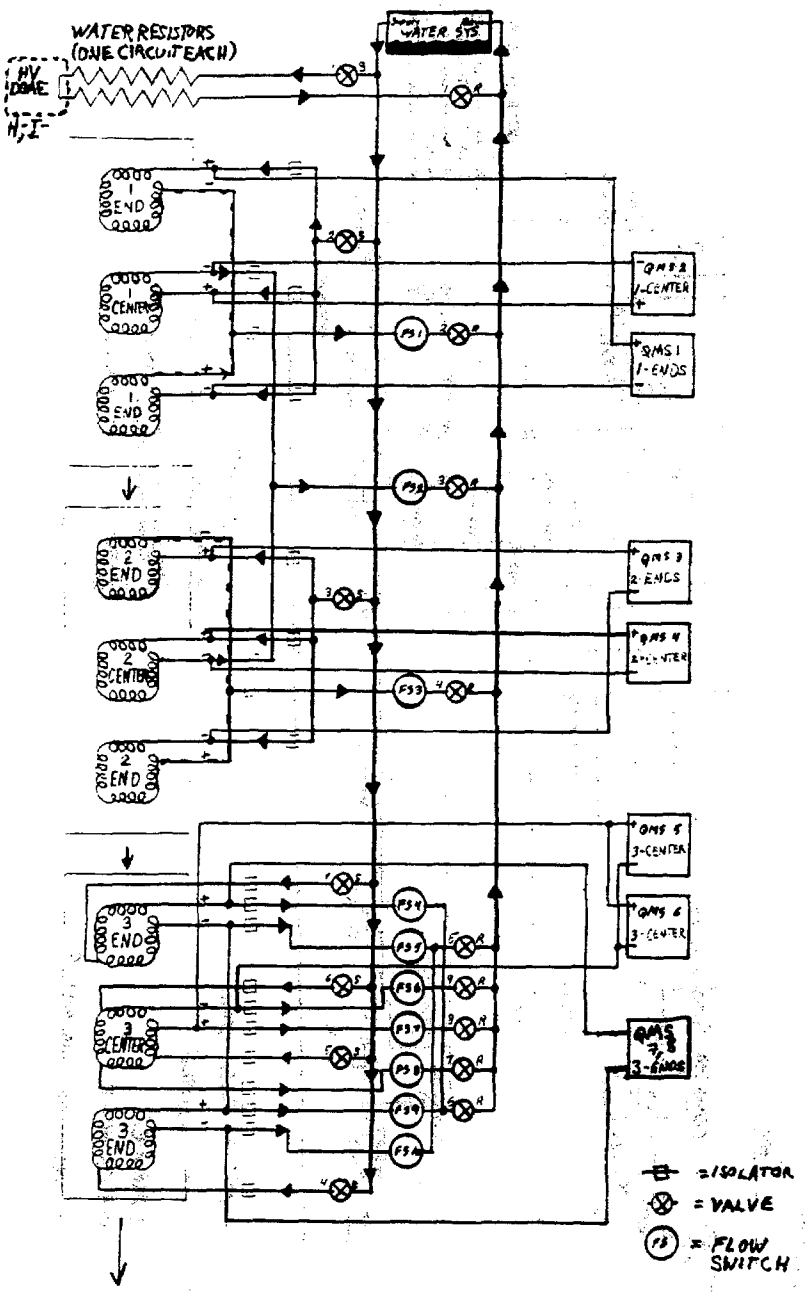

figure 10.2: I- 750 keV line water system

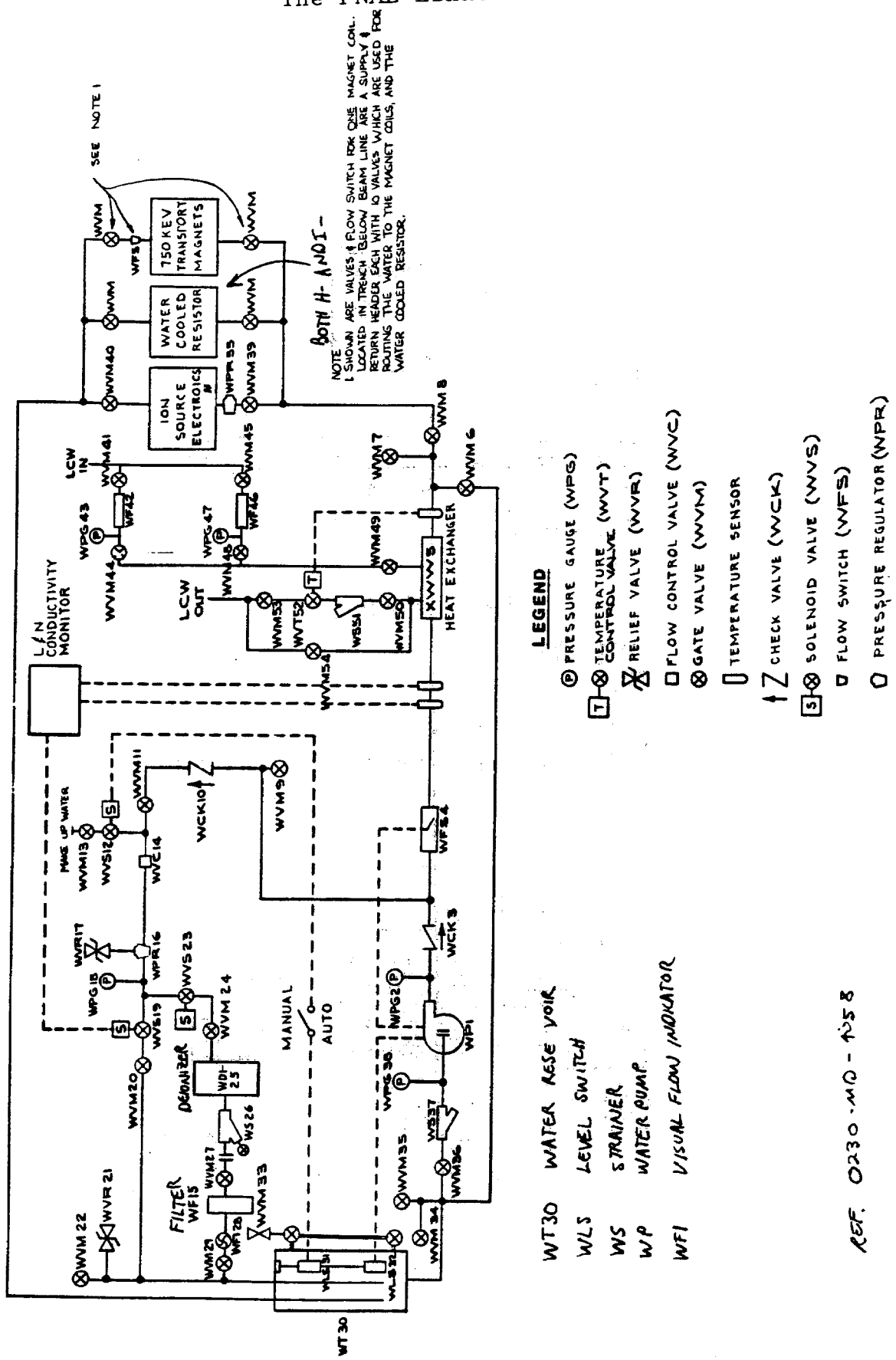

figure 10.3: preaccelerator water pump station

10.1 Preaccelerator Water Systems

Two cooling systems service the preaccelerators. The distribution of the load is a bit uneven due to the different ages of the preaccelerator systems (I- predates H- by a few years). One system cools the I- 750 keV line, the I- Haefely power amplifier, and the water resistors for both H- and I- systems. This system is in the lower linac gallery just outside the door to the preaccelerator control room (fig. 10.3). The other system cools the H- 750 keV line and the H- Haefely power amplifier. It is located by the water system for linac RF station 1 and is easily distinguished by its blue front panel. Both systems have local control of pump motors, and local readouts of pressures, temperature, and conductivity.

All of the elements in the 750 keV transport lines are water-cooled, with flow switches to trip off their power supplies if there is insufficient water flow. The status of the flow switches, temperature-sensing *klixons*, and other interlocks are shown at the top of the relay racks that contain the power supplies, located in the preacc control room. The flow switches for the I- 750 keV line are mounted in a box on the wall to the left of the upper door to the I- pit. Valves for the individual elements are located beneath the floor plates there. The flow switches for the H- 750 keV line are mounted in a box on the wall at the west end of the catwalk over the 750 keV line; valves are mounted on the wall beneath the box. Schematics of the H- and I- 750 keV line water flows are shown in figures 10.1 and 10.2.

10.2 Cavity and RF Water Systems

The cavity and RF water systems for a given station have a common control panel with two sets of gauges. System pressures and temperatures can be read and the pumps controlled from here. Note that the large indicator light at the top is lit if that system's pump is <u>off</u>, not on. The RF water system plumbing is immediately behind the control panel, and the cavity water system is toward the rear wall of the gallery. The RF system conductivity meter and a duplicate set of controls for the RF system pump are located in the A7 racks in the upper gallery.

The RF water cooling systems (fig. 10.4) each remove about 150 kW of waste heat from the RF components. Water temperature is regulated at about 80°F. If the temperature exceeds 120°, the system automatically shuts off.

A master control station in the A7 racks regulates, monitors, and interlocks the flow of water to the various components of the RF system (fig. 10.4). Conductivity is monitored and displayed by a meter here. Flow control is accomplished by using variable area valves for each circuit. The supply valve for each circuit is on the front of the

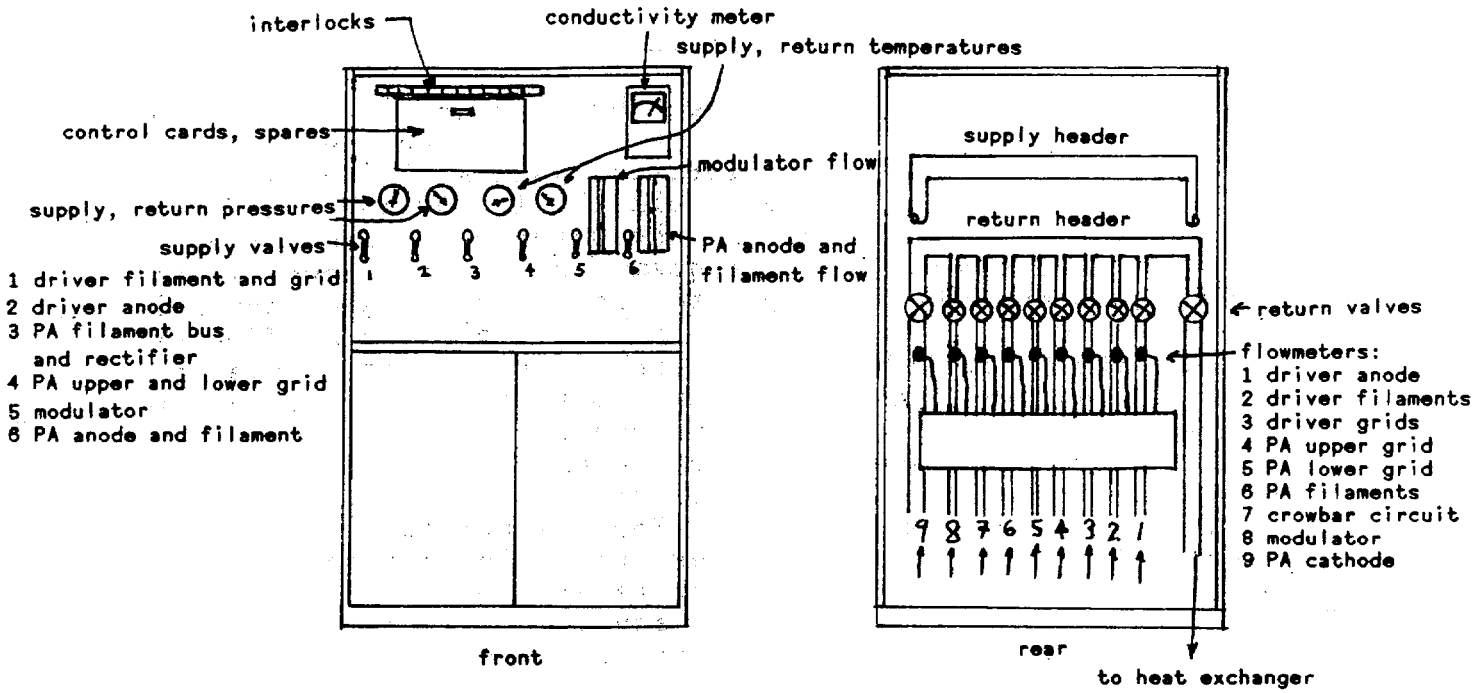

figure 10.4: A7 rack (RF water system control panel)

cabinet, and the return valves are in the rear; some circuits have more than one return line. If a system is to be isolated, close the supply valve first, then the return (get this backwards and you're in for a shower). Each individual circuit may be purged of water with nitrogen gas.

All water-cooled RF components (fig. 10.5) are interlocked to their power source by flow and thermal switches in the return lines from each circuit. The interlock cards are located behind a door at the top of the panel. Spare cards are located there also, as well as the cage in the lower linac gallery by system 1.

The power removed from each cavity by the cooling system (fig. 10.6) is determined by the combination of RF losses and quadrupole power required by each cavity, which range from 10 kW for tank 1 to 25 kW for tank 9. To maintain a stable cavity resonant frequency (at least within the range where the tuning slug can maintain control), the supply temperatures for these systems is maintained to ±0.1°F of a preset temperature between 72° and 78° F by a Honeywell temperature controller located behind the A5 racks. The loop set point, present value, and recorded values are presented there. The closed servo loop regulates the flow of cold water to the primary side of the heat exchanger.

10.3 Water System Operation

The fact that the linac is very sensitive to variations in water system temperature cannot be overstressed. Tank 1, with its small tuning slug, is particularly sensitive to temperature fluctuations. In fact, temperature problems are usually heralded by the tuning slug in tank 1 hitting the stops with resultant alarm: SYSTEM 1 FREQ CCW LIMIT (although this may have another, interesting cause: sec. 9.2).

Sometimes this can be remedied by altering the set point on the Honeywell temperature controller (0.1° or less, please) up or down depending on which way the slug is ranged out (warmer to lower the frequency of the tank, colder to raise the frequency). This is done by opening the front panel of the controller and changing the position of the green arrow with the thumbwheel. The knob on the front of the controller is a direct manual control of the temperature-regulating valve and will only cause wild oscillations if turned. Don't try it.

More often, however, the problem is with the temperature of the 55° system itself. The 55° system water temperature L:LCWT is set to alarm below 48° or above 56° F. 55° system temperature alarms should be investigated by CUB personnel or the duty mechanic <u>at once</u>. If the temperature continues to rise above the set limit:

1) Shut off the beam.
2) Run down gradients, turn off pulse and modulator HV and run PA filaments down to zero at all stations.

If the temperature continues to rise, call the linac system specialists. In extreme cases:

4) Shut off PA filament power, control power, and all other RF power supplies at all stations.
5) Shut off all quadrupole power supplies (this is done most efficiently by turning off all the wall-mounted breakers located behind systems 1, 4, and in an office between systems 7 and 8).
6) As a last resort turn off the pumps for the RF and cavity water systems.

The above procedure is also used in the event of hose leaks in the modulator or the downstairs water system. A cavity water leak is cause for shutting down the system and calling linac system experts <u>immediately!</u>

When the system shuts down (or is shut down) it must be manually reset with the switch at the top of the A7 rack. If the system is reluctant, check: thermal overload switch, circuit breakers for motor contactors, and the system instrumentation breaker.

Occasionally it is necessary to make up volume in one of the water systems by filling the reservoir from the 55° LCW system. The procedure is as follows:

1) Set Auto/Manual switch on control panel to AUTO.
2) Open valve labeled 55° HEADER.
3) Water level on reservoir sight glass should rise and stabilize at correct level when automatic valve closes. Close 55° header valve, and return system to MANUAL.
4) If level in reservoir falls, close 55° header valve. Locate flow gauge next to valve labeled VALVE #2. Slowly close valve #2 until indicator in flow gauge drops 1/8". This reduces the system pressure to less than that of the 55° header so that the system may draw water from the header.
5) Open 55° header valve and fill reservoir to correct level.
6) Close 55° header valve, open valve #2, and return system to MANUAL.

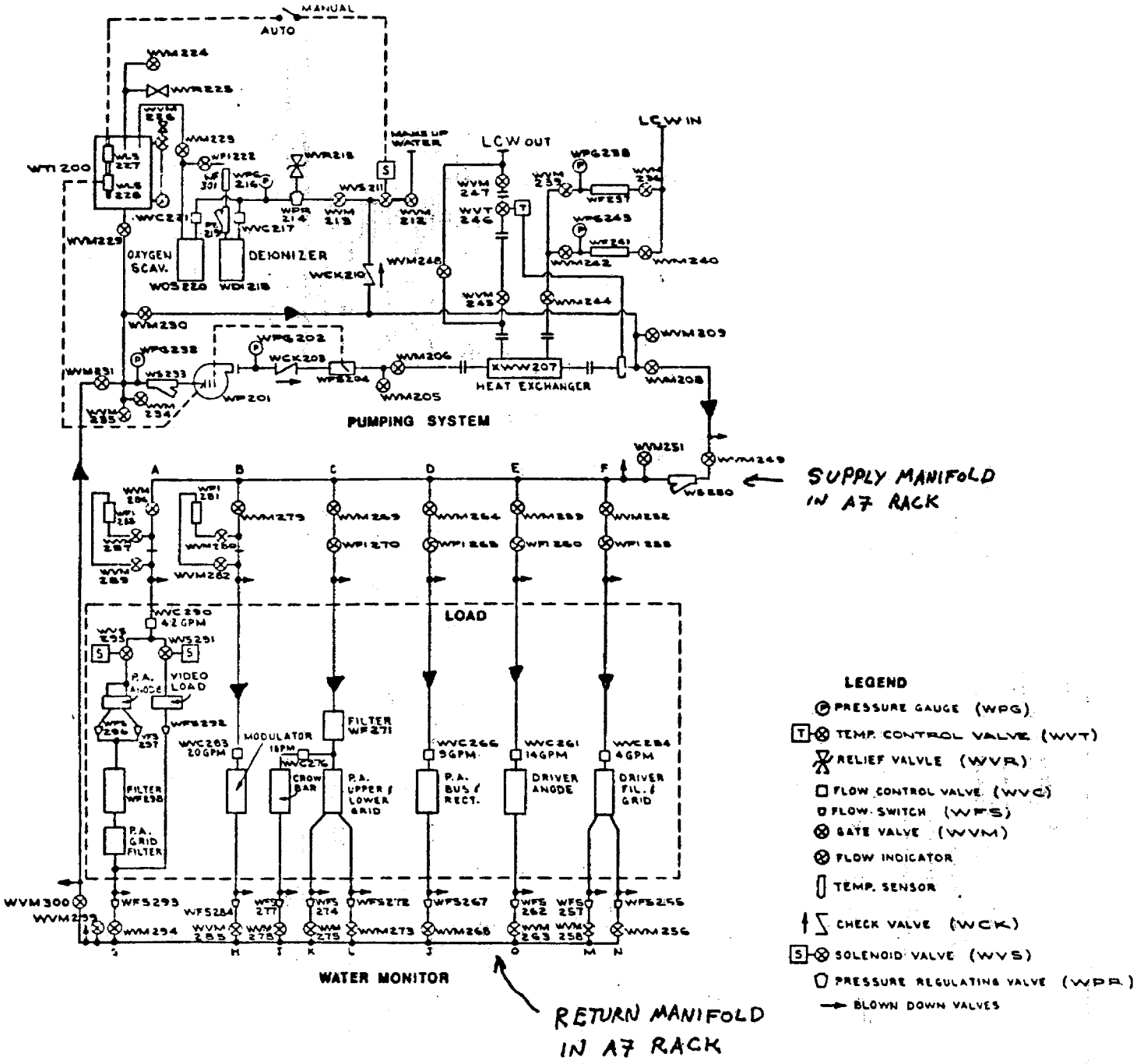

figure 10.5: RF water system

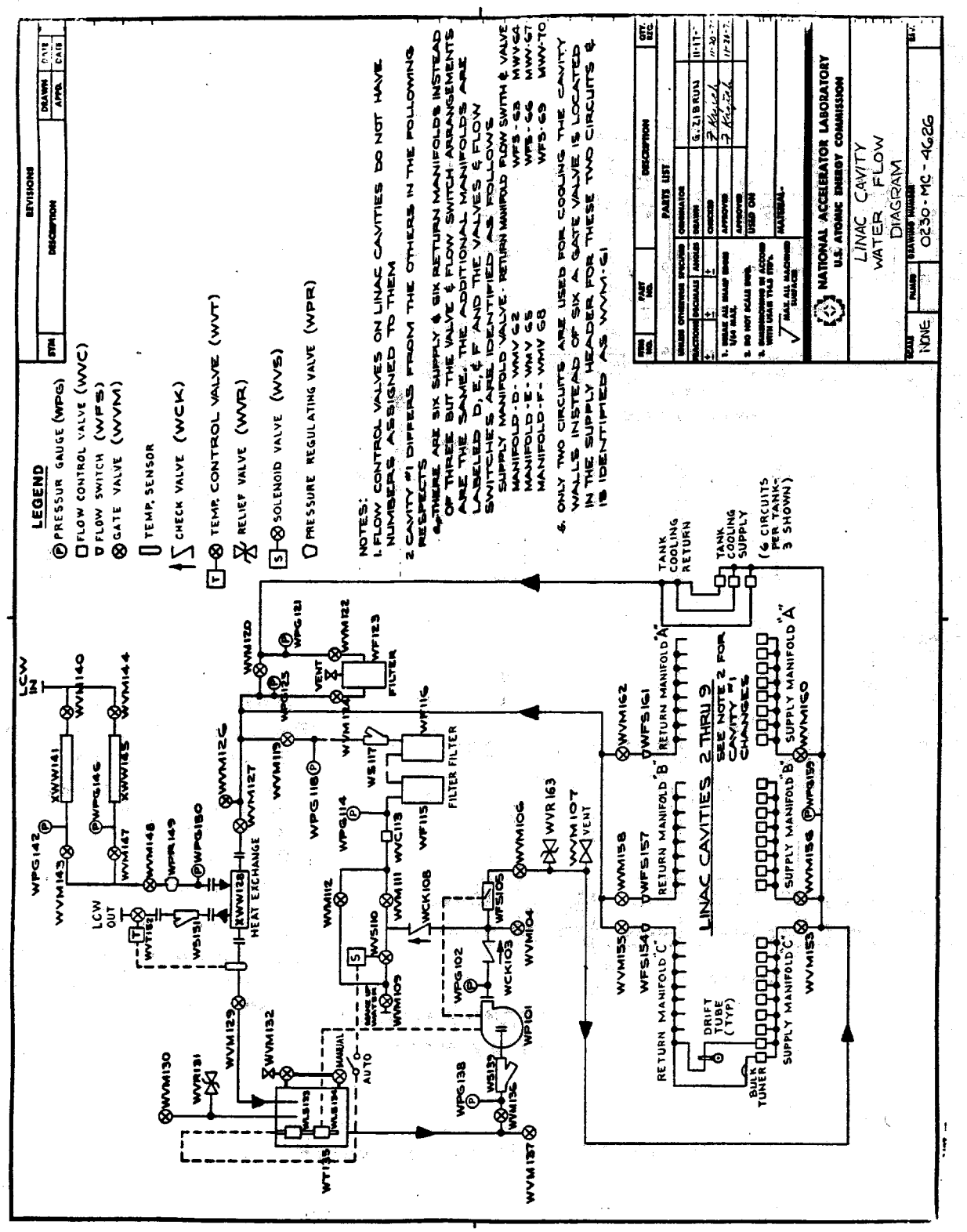

figure 10.6: cavity water system

11 NEUTRON THERAPY FACILITY

The Neutron Therapy Facility (NTF, or the old designation CTF, for Cancer Therapy Facility) uses high energy neutrons for the treatment of malignant tumors. Neutrons are produced by bombarding a beryllium target with 66 MeV H- ions and exposing a patient to the collimated neutron beam under tightly controlled conditions. The first facility was started up in July 1975. Patient treatment with a rebuilt and more sophisticated setup began in September 1976 and continues today.

The operation of the linac as a booster injector takes about one second during the accelerator cycle. In the days before P-bar, the linac was left idle much of the time and much beam could be devoted to NTF operation. More recently, rapid cycling of the booster as an accumulator/debuncher injector has created a greater demand for linac beam.

11.1 Beamline

The linac gallery floor plan determined the location of NTF, which required the use of an existing freight elevator at the junction of tanks 4 and 5. The beam energy is 92 MeV at this point but the strongest conventional pulsed magnet that will fit in the 1-meter space between the tanks and still bend beam through the required angle can only bend beam of 65-70 MeV. The solution is to accelerate NTF beam pulses through the first three linac cavities and then permit the ions to drift through tank 4 without additional acceleration. This is accomplished by delaying the timing of the RFON pulse for system 4 by 1 msec so that the RF pulse does not occur until after the beam has passed. The tank quadrupoles pulse at the regular time.

The ion beam is extracted by a pulsed C-type magnet L:C58DEG which bends the beam through 58° to miss tank 5. The current in this magnet is ramped down when not sending beam to NTF to permit normal linac operation, taking about 0.2 second to change states. A second set of coils in the same magnet driven by the supply L:C58VER bucks out any residual fields when the main supply is ramped down (OPBULL 400). A Hall probe in the magnet aperture measures the magnetic field and may be read out through the control system. A 32° H-magnet, L:C32DEG, completes the 90° bend to send the beam through a transport line that passes through the wall of the linac enclosure. This supply runs DC.

The transport line contains seven quadrupoles and two horizontal trims, as well as a toroid for monitoring beam intensity. The transmission efficiency of the line is typically 95%. Although the line is not achromatic, it is

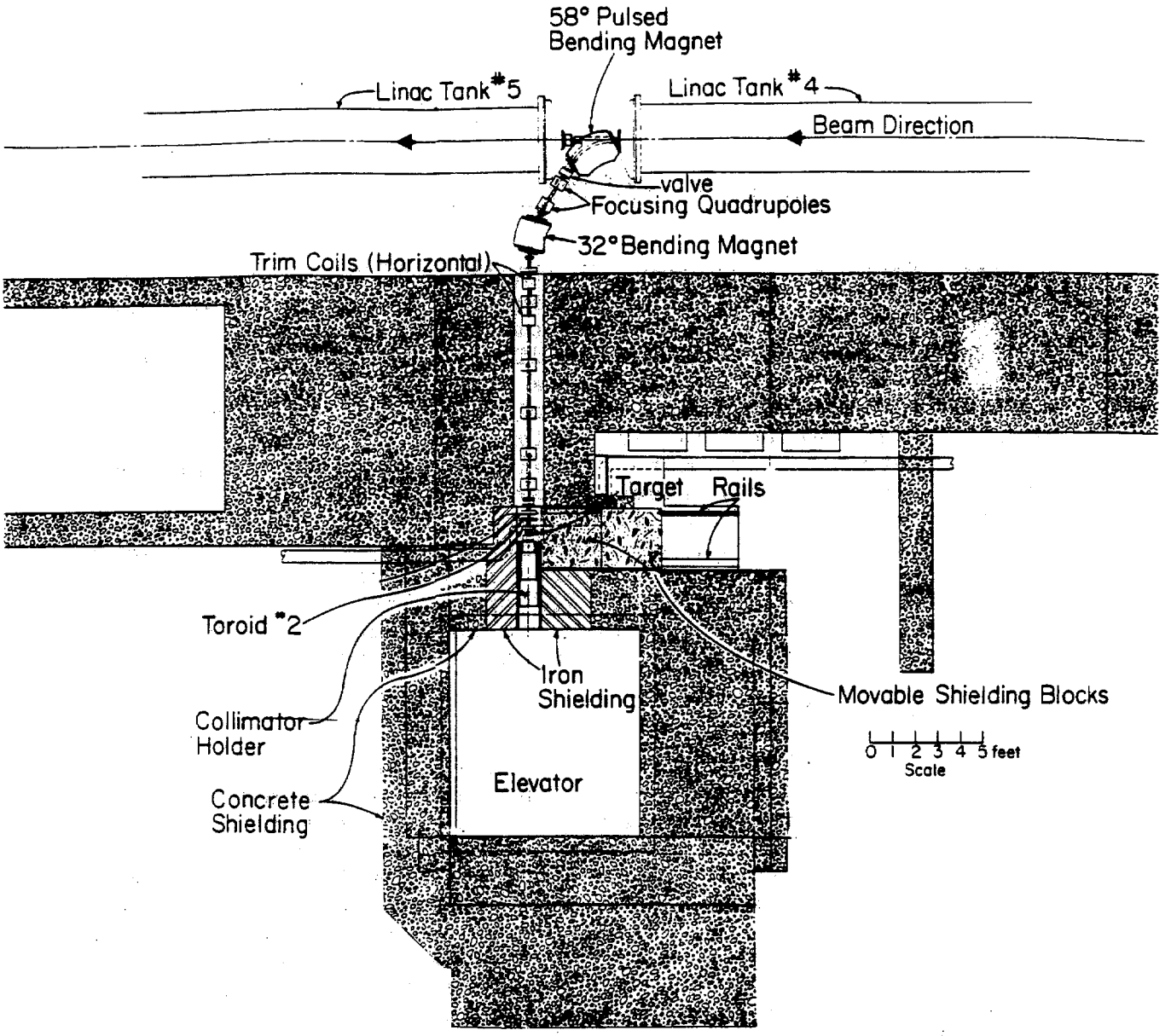

figure 11.1: NTF beamline

designed to have zero dispersion at the target (TM 556). In this way the effects of variations in beam momentum and focusing are minimized. Total length of the NTF transport line is about 20'; power supplies are located in the lower linac gallery below RF system 4.

11.2 Target and Collimator

At the end of the transport line, the beam is focused to a 6 mm diameter spot, limited by the gradients available in the beamline quadrupoles. A tantalum collimator (fig. 11.2) with a 15.9 mm bore prevents off-axis ions from striking the target. The target itself is a beryllium disk (TM 928) 25.4 mm in diameter and 22.1 mm thick. Beryllium is used due to its low atomic number (increases neutron production) and good mechanical properties (easier to work with than lithium).

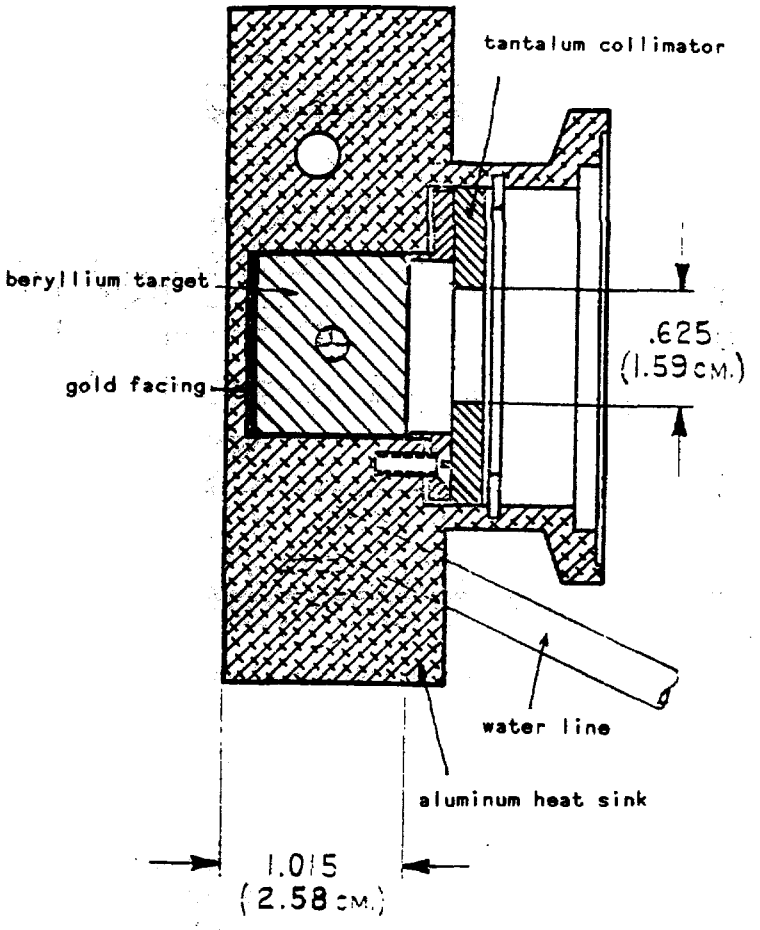

figure 11.2: target and mounting block

The target removes 49 Mev from the incident ions, with the residual energy being spent in a gold disk that backs the beryllium block (TM 834) and improves thermal conductivity to the heat sink. The target assembly is housed in a water-cooled aluminum holder, which is electrically grounded. Experience has shown that targets last at least five years before they must be replaced due to cumulative radiation damage.

The neutrons pass through a *primary collimator* (fig. 11.3) in the form of a steel cone 12.7 cm long. At the downstream end of this collimator two *air ionization chambers* are used to monitor the neutron flux. These chambers consist of aluminum plates (alternating high-voltage and signal planes) separated by air. As the neutrons ionize the air, charge accumulates on the signal planes. When corrected for chamber temperature and barometric pressure (the interior of the chambers are open to the atmosphere) the charge on the plates is proportional to the neutron intensity. During treatment the ratio of the output charges between the two chambers and the ratio of the beam current (measured by the toroid in the transport line) to the output charge of the first chamber are monitored. If the ratios fall outside a narrow range, beam is inhibited.

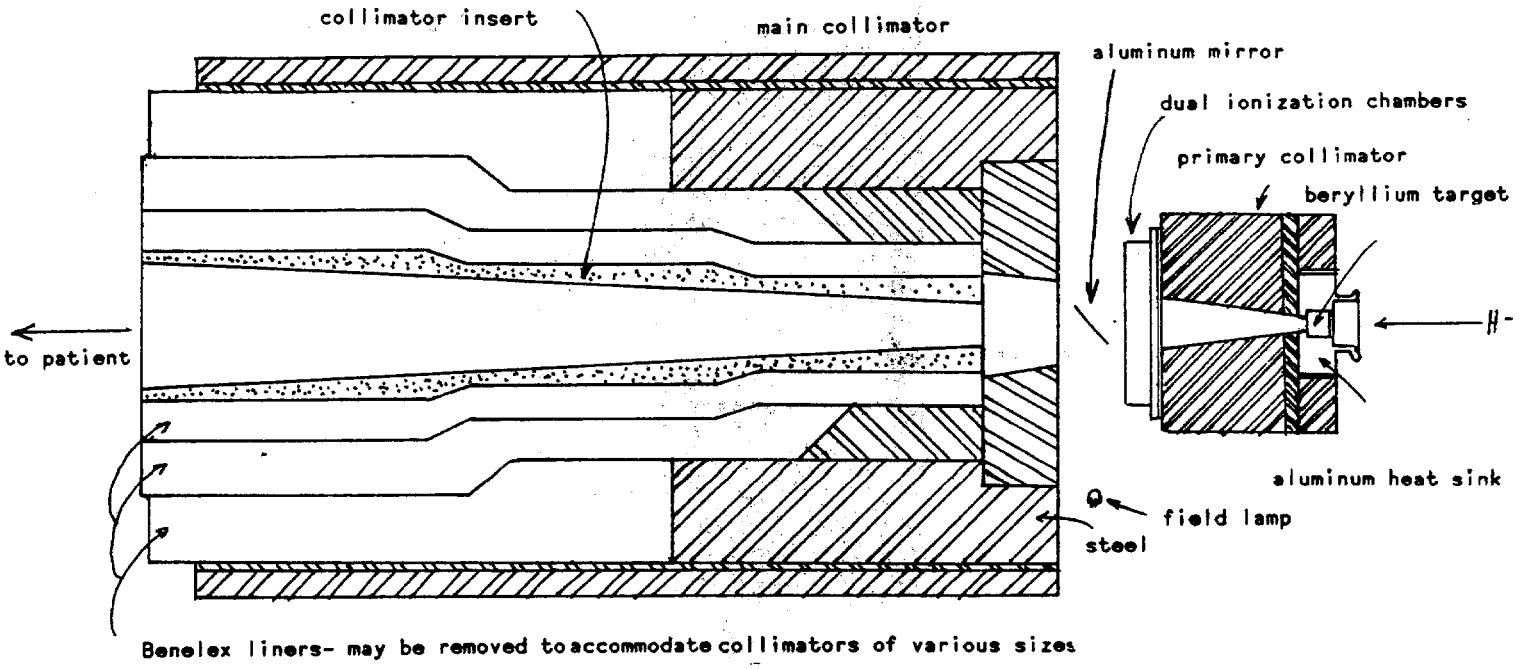

figure 11.3: NTF collimators

The output of the chambers is calibrated to the output of a tissue-equivalent ionization chamber (TM 834) that is itself calibrated using a cesium-137 source in a fixture of known geometry. These two calibrations are performed at the beginning of every treatment day, and the output of the cesium-137 source is measured once a week, using a chamber calibrated by the National Bureau of Standards on a yearly basis (TM 1018).

Downstream of the primary collimator, the 94 cm long *main collimator* shapes the neutron beam to the desired size. A steel cylinder is fitted on the inside with a series of concentric *Benelex* liners (similar to G-10), which surround the collimator. Collimators are formed of a mixture of 1/8" polyethylene pellets, cement, and water. The Benelex liners can be removed to permit collimators with various size cross-sections to be used. Neutron beam cross sections, as measured in the plane of the area to be treated, can be up to 30 x 30 cm^2. The entire main collimator can be rotated about its long axis if a particular orientation is required. Teflon wedges may be attached to the downstream end of the main collimator to act as neutron attenuators or "prisms" to produce neutron flux gradients across the width of the subject.

11.3 Patient Setup

The treatment room is built on a freight elevator (fig. 11.4). Entrance, simulation, and patient positioning take

place on the upper level. For actual treatment, the room travels to the lower level where the neutron beam enters from the wall-mounted collimator. A geometric reference point at each level (*isocenter*) used in patient setup and alignment is defined by two orthogonal pairs of HeNe laser beams. The geometric relation of an X-ray source to the upper-level isocenter (or X-isocenter) is the same as the relation of the neutron source (assumed to be in the center of the target) to the lower-level isocenter (N-isocenter) with a 180° difference in orientation (fig. 11.4). The patient is usually positioned such that the tumor to be treated lies at the isocenter.

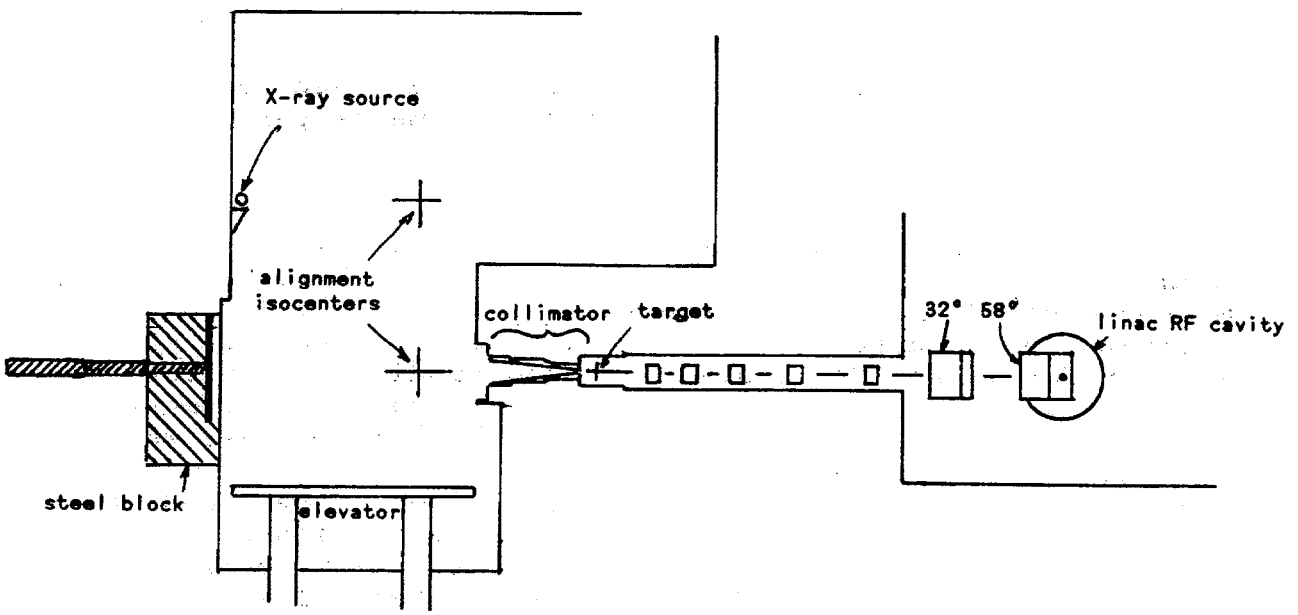

figure 11.4: NTF treatment room geometry

The patient is immobilized in the restraining chair usually by means of a custom-made cast. The areas where the neutron beam will enter the patient ("portals") are determined by diagnostic radiographs (X-ray pictures), using the known geometry of the X-ray source and the X-isocenter. The positions of the restraining chair (adjustable in rotation, elevation, and two orthogonal directions) are adjusted to produce the desired field cross-section at the *isoplane*, the plane containing the isocenter and perpendicular to the neutron beam axis. In most cases, the transition from portal to portal is done by rotation only. The restraining chair coordinates at each portal are recorded so they may be easily reproduced.

Reference points are drawn on the patient's skin (or cast) using the alignment laser beams in the upper level. The patient is then lowered to the neutron level, and the chair rotated through 180° and translated to the N-isocenter. The alignment laser beams at this level then duplicate the geometry of the lasers at the upper level, and

the distance from the N-isocenter to the neutron target is the same as the distance from the X-isocenter to the X-ray source (190 cm). The lasers thus permit quick confirmation of proper alignment of the patient, in addition to the known coordinates of the restraining chair. The position can be further verified by taking neutron radiographs and comparing them to the original diagnostic radiographs (TM 834). As a final test, a small *field lamp* illuminates the patient through the main collimator by means of an aluminum mirror placed between the primary and main collimators at a 45° angle to the beam axis.

Once the correct collimator is in place, the air ionization chambers calibrated, the patient properly positioned, and the linac and NTF transport line are ready (see below), treatment may begin.

Individual neutron therapy programs average about four weeks in duration, with two to three treatments per week.

11.4 Control System

The treatment apparatus is controlled by *medical* and *beamline microcomputers* (fig. 11.5). The beamline microcomputer monitors transport line dipole magnet currents, beam current, interlock status, commands the phase shifter for linac RF system 4, and handles communication with linac secondary #C. It also measures barometric pressure and integrated ionization chamber voltages which are then used to calculate dosages (expressed in *monitor units*), given parameters loaded from the medical microcomputer. The beamline microcomputer monitors neutron dosages during patient treatment, automatically terminating exposure when the desired dosage is reached. The beamline microcomputer, beamline power supplies, measuring and integrating electronics, A/D converters, timers, and interlock systems are located in the lower linac gallery near the water system for RF station 5.

The medical microcomputer in the NTF control room interfaces with the radiation therapy technologists via a console, and performs calculations for cesium-137 source and air ionization chamber calibration. Auxiliary hardwired *scalers* and timers in the same racks will inhibit beam if the beamline microcomputer should fail to end the exposure when the correct number of monitoring units have accumulated.

Any unusual variation of 32° or 58° magnet current or ionization chamber response during treatment will cause the beamline microcomputer to inhibit beam via the NTF interlock system (sec. 11.5). Quadrupole currents in the transport line are monitored by secondary #C and will also inhibit beam via the beam inhibit line (sec. 3.4) if they wander out of tolerance. Once all the necessary conditions for a beam permit have been satisfied, actual exposure begins when two beam request switches on the *NTF beam control module* are pushed simultaneously.

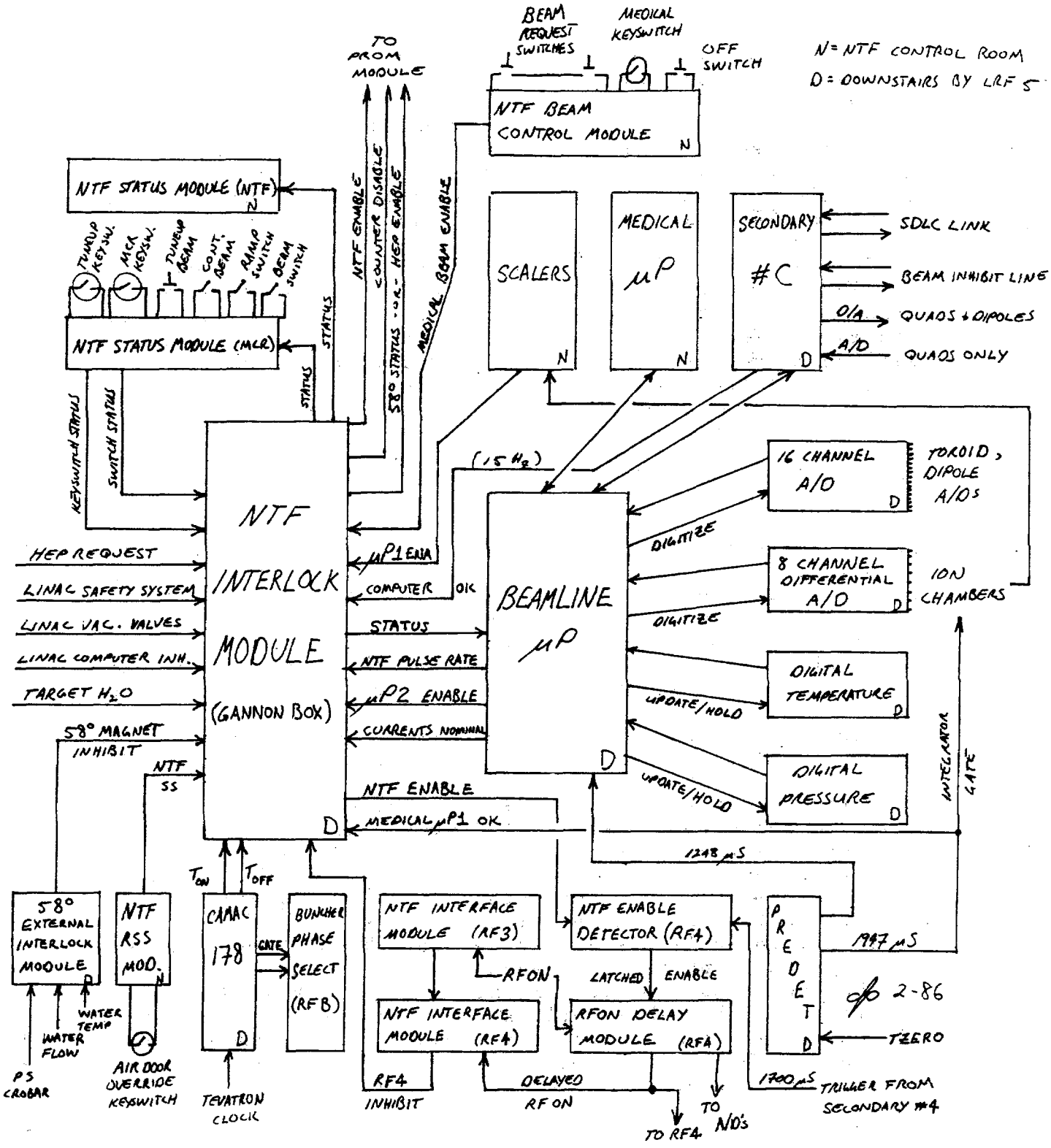

figure 11.5: NTF control system

11.5 NTF Interlocks

The following information on the NTF interlock system was the best available at the time of this writing (3-86). This system is due for an upgrade in the near future; hopefully it will be properly documented.

When a beam request and appropriate set of conditions exist at the prom module, the pulse shifter will permit beam in the linac. An elaborate system of interlocks (TM 613) allows an NTF beam request to occur only under the proper conditions.

The task of collecting interlock data is allocated to the *NTF interlock module* (fig. 3.1), also known as the *Gannon box*. This box receives all kinds of hardwired information (see below) as well as information from the beamline microcomputer. This information is displayed on the front of the box and at two remote *NTF status modules*, one in the NTF control room and one in the MCR. Be forewarned that all three of these boxes are labeled differently- an interlock's name may change from box to box. The interlocks listed here follow the names on the module in the MCR.

There are three levels of interlocks in the NTF system, each a superset of the previous level. The ANDed sum of the first level of interlocks is a *ramp enable*, which will permit the 58° bend magnet to ramp. All the inputs to the first two levels follow two separate and redundant electrical paths, labeled "A" and "B". Thus there is an "A ramp enable" and a "B ramp enable" that look at the same interlocks. Both are required to permit the 58° supply to ramp.

Among the second-level interlocks is one called CURRENTS NOMINAL. This is an indication that the 58° and 32° supplies are on at the proper level, which means that the A and B ramp enables must exist. These enables are thus inputs to the second level of interlocks, which are ANDed together like the first level in two redundant electrical paths to produce *system ready* indications, "A system ready" and "B system ready". These are then ANDed together to form an input to the third level of interlocks.

If all three levels are made up, NTF will receive beam if the linac is physically capable of producing it.

The the status module in MCR relay rack MCRR #1 shows the status of the NTF interlocks. An LED next to each input will be out if that input is "bad", inhibiting NTF beam. Starting with the bottom (first level) interlocks (all inputs hardwired unless otherwise indicated):

A RAMP ENABLE	"A" system first-level sum.
B RAMP ENABLE	"B" system first-level sum.

TIMED ON — Gate, defining the times when the 58° may ramp, exists. These times are generated by a CAMAC 178 card in the rack above the Gannon box, and are referenced to tevatron clock events 1A and 1B. This card also

generates the gate for switching the buncher RF phase for the NTF pulse (sec. 6.1). Also see description of "NTFP" bit on help pages for the Time Line Generator, ACNET page D69.

LINAC SECURE — Linac safety system status, hardwired from CARESS module (sec. 13.2, fig. 5.1) in MCR.

NTF SECURE — NTF safety system status.

MCR RAMP SWITCH — Toggle switch to right of LED. If off, will inhibit 58° from ramping.

MED. μP1 ENABLE — Also SCALER ENABLE. Scaler module in NTF control room is on, providing backup dose limiting in case beamline μP fails to end dose at correct level.

MED. μP2 ENABLE — Sum of 8 bits from beamline μP (also DOSE OK, BEAMLINE μP ENABLE, or CB2). Includes inhibits for missing beam pulses, bad ion chamber ratios, treatment limit reached, and bad μP power supplies.

MED. μP1 OK — Also TO OK. Ion chamber integrator clamp pulse (1947 μsec.) appearing. From predet above Gannon box, referenced to TZERO.

MED. μP2 OK — +5 volt power supply in Gannon box.

The second-level interlocks are as follows:

A SYSTEM READY — "A" system second-level sum.
B SYSTEM READY — "B" system second-level sum. Two unlabled red buttons on the front of the Gannon box will remove either the "A" or "B" system ready to test the interlock chain. This inhibits NTF beam, of course.

LINAC COMPUTER OK — 15 Hz interrupt from secondary #C's CPU (not timer board- sec. 12.2).

CURRENTS NOMINAL — 58° and 32° magnet currents within limits for NTF beam. (A,B ramp enable required.)

NTF VAC. VALVE — Vacuum valve downstream of 58° magnet open.

COMPUTER INHIBIT — Also LINAC MONITOR. Status of linac beam inhibit line (sec. 3.4).

TARGET H_2O OK — Target cooling water flow OK.

RF4 INHIBIT — Linac RF station 4 pulse properly delayed by 1 msec to allow beam to coast through tank 4. From NTF interface module at system 4.

58° CURRENT — Also 58° MAGNET INHIBIT. Status of external interlock chassis for 58° magnet. From rack above Gannon box.

This section also contains a switch labeled CONTINUOUS BEAM. This enables the 58° magnet to stay on DC, ignoring HEP enables from the keyswitch module in the MCR (sec. 3.2), thereby inhibiting HEP beam.

The third-level interlocks are as follows:

TREATMENT ENABLED — Sum of all interlocks. Linac will send beam to NTF when this is lit, if beam is possible.

MEDICAL OR TUNEUP KEY — Key must be turned in either tuneup keyswitch (on status module in MCR) or medical keyswitch in NTF control room. Key issued by MCR crew chief.

MCR BEAM SWITCH — Toggle switch to right of LED. Inhibits NTF beam, but not 58° magnet ramping.

MEDICAL BEAM REQUEST — Request from pushbuttons on NTF beam control module to initiate beam.

NTF PULSE RATE — Beam enable from beamline μP.

SYSTEM READY — Sum of first and second-level interlocks. This is the signal passed through the tuneup and medical keyswitches.

At the bottom of the NTF status module are two keyswitches. The MCR keyswitch must be in the ON position for NTF beam to occur. The tuneup keyswitch allows beam when the key is turned and the tuneup beam switch above it is pressed. This is used when tuning up the transport line. The same key is turned in the medical keyswitch in the beam control module during patient treatment.

11.6 RF4 Pulse Delay

When the 58° magnet is enabled, the beamline μP sends a signal to linac RF system 4 to delay the RF pulse. The delay system consists of two modules in the racks behind the A5 racks for system 4. At 1700 μsec into the cycle (55 μsec before the normal RFON pulse) the first module looks to see whether an NTF enable exists at the input from the beamline microcomputer. If it does, the NTF enable output to the second module is latched, to prevent the system from "changing its mind" during the beam pulse. When the second module receives the NTF enable, it delays the incoming RFON timing pulse from the preacc control room by 1 msec before passing it on to the low-level system. When NTF beam is enabled, the first module also sends a delayed trigger

signal to the A/D converters that are responsible for RF system readbacks, so that they sample at the correct time with respect to the RF pulse.

To determine whether the RF for system 4 is actually being shifted, *NTF interface modules* at systems 3 and 4 look to see when the RFON pulse occurs at their respective systems. The module at system 3 sends its pulse to the module in system 4. If the two pulses differ in time by 1 msec, a line from the module in system 4 to the Gannon box goes high, permitting NTF beam. If the signals don't differ by 1 msec, the line goes low, inhibiting NTF beam by removing the RF4 INHIBIT input from interlock chain. This removes the NTF enable output from the NTF status module in the MCR. The interface modules are located in the crates containing the modulator pulse-forming circuitry at stations 3 and 4.

Another NTF enable signal is sent to the low-level system for the buncher (via the prom module in the preacc control room) to select the RF phase used for NTF beam pulses. The duration of the shift in phase is controlled by the CAMAC 178 card in the rack above the Gannon box, which sends its times to the buncher phase select module at the buncher RF station (sec. 6.1).

11.7 NTF Operation

The responsibility for operating the Neutron Therapy Facility beamline lies with the staff of NTF. The responsibilities of the operations group as regards NTF are to keep the preaccelerator, 750 keV transport line, buncher, RF systems 1-3, and tank quadrupoles in systems 1-4 in operation (OPBULL 923, 1047). During actual patient treatment time, these items have top priority.

Daily operation of NTF begins with the issuing of three keys from the MCR. The NTF beam enable key (brown tag), the NTF reset and enable key (red tag), and the air door override key (white tag). The beam enable key is turned in the MCR keyswitch on the NTF status module and is left there for the duration of NTF operation. The reset and enable key is placed in the tuneup keyswitch during tuneup of the transport line, and in the medical keyswitch in the beam control module in the NTF control room during patient treatment. The air door override key allows the large pneumatically-controlled shielding door on the upper level to remain partially open during treatment. This is because shielding requirements are met by closing a smaller and more easily opened door on the upper level. The air door override key fits in the NTF radiation safety system module in the NTF control room.

Since NTF does not depend on RF system 4 or systems 5-9 to operate, a beam inhibit from one of these areas may be bypassed in order to run NTF beam. However, HEP beam should <u>NEVER</u> be run under these conditions. A prerequisite for bypassing an inhibit for the benefit of NTF is the removal of the HEP enable key from the abort logic/pulse shifter

interface, which will disallow HEP and P-bar beam enables. This key is then locked up in the Crew Chief's cabinet until the inhibit monitoring is restored.

12 CONTROL SYSTEM

The text of this section borrows heavily from TM 1238, written by Mike Shea.

The linac control system (fig. 12.1) consists of seventeen *secondary* microcomputers that converse on a fiber-optic *serial data link*, and a *primary* microcomputer which controls the link and communicates with outside *host* computers. The secondary stations are physically distributed throughout the linac (fig. 12.2); each major equipment area has its own dedicated microcomputer. The primary station is located by RF system 6.

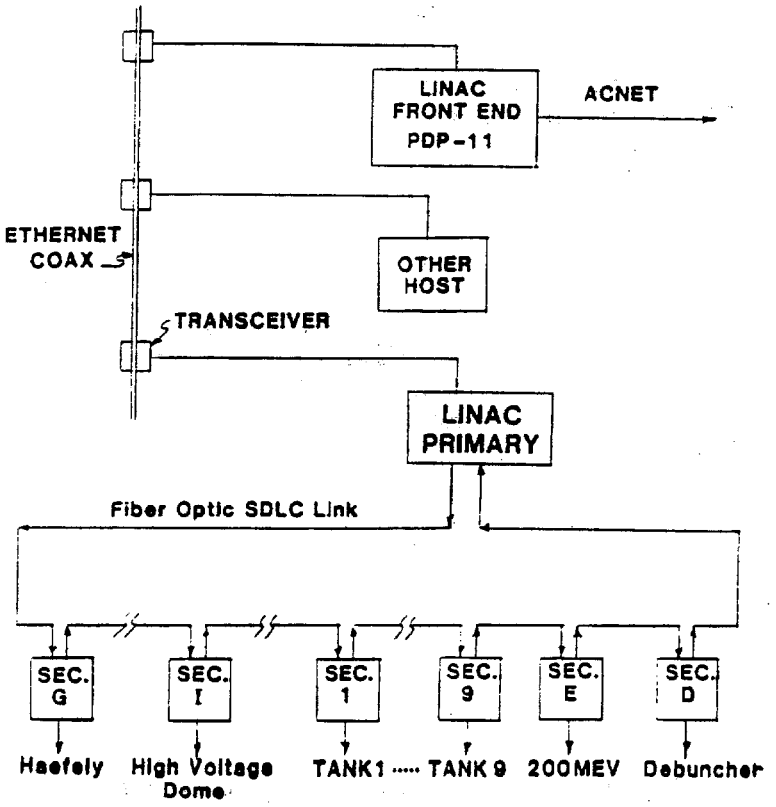

figure 12.1: linac control system

12.1 Link

The serial communication link is a single fiber-optic cable that carries *Manchester* encoded data signals using

IBM's *SDLC* (Synchronous Data Link Control) protocol. Manchester encoding consists of phase reversals of a periodic signal that operates at a specified frequency, in this case 1 MHz. The link starts and ends at the primary control station, carrying signals in one direction around in a loop (fig. 12.2). Each secondary station has a *fiber optic link repeater*, which receives and decodes signals from the upstream link, then encodes and transmits data to the downstream link. The order of the secondary stations on the link is:

G H I B 1 2 3 4 C 5 6 A 7 8 9 E D

where G = ground station (H-, I- Haefely control, 750 keV lines)
H = H- source
I = I- source
B = buncher
1-4 = RF stations 1-4
C = NTF (formerly CTF)
5,6 = RF stations 5,6
A = RF station 10 (test station)
7-9 = RF stations 7-9
E = 200 MeV area
D = debuncher

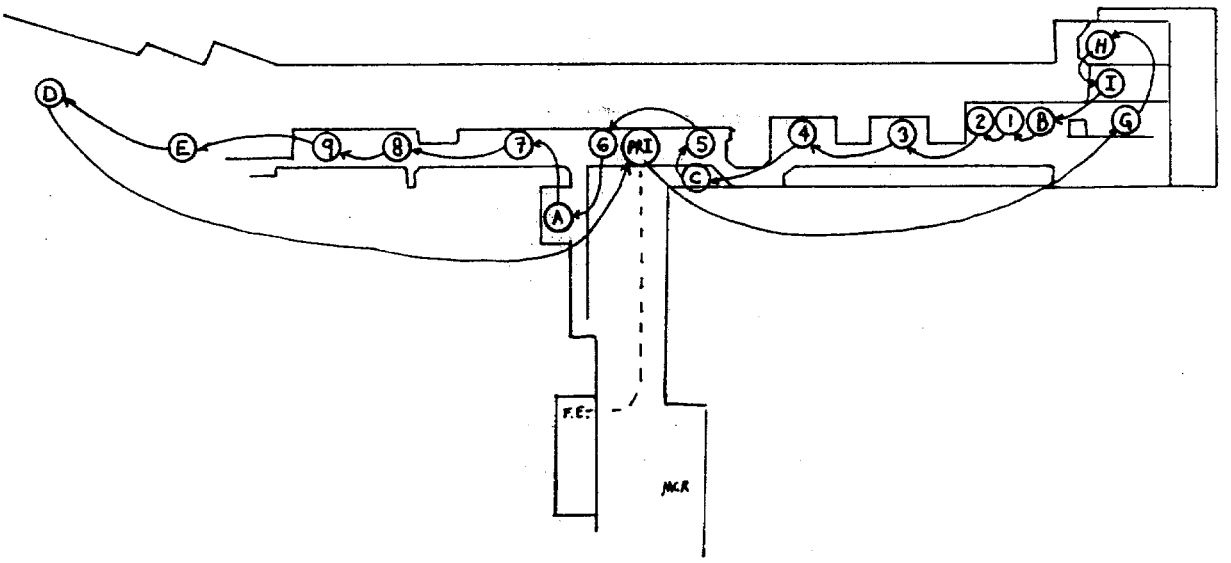

figure 12.2: SDLC link routing

The fiber-optic system was chosen for its immunity from noise (important for operating around RF systems) and the simplicity of communicating with the H and I secondaries located in the -750 kV domes.

12.2 Secondary Station

Each secondary (fig. 12.3) is a complete miniature control system consisting of a Motorola MC68000-based single-board computer, 32K of magnetic (nonvolatile) RAM, two nine-byte binary I/O boards, a nine-channel timer board,

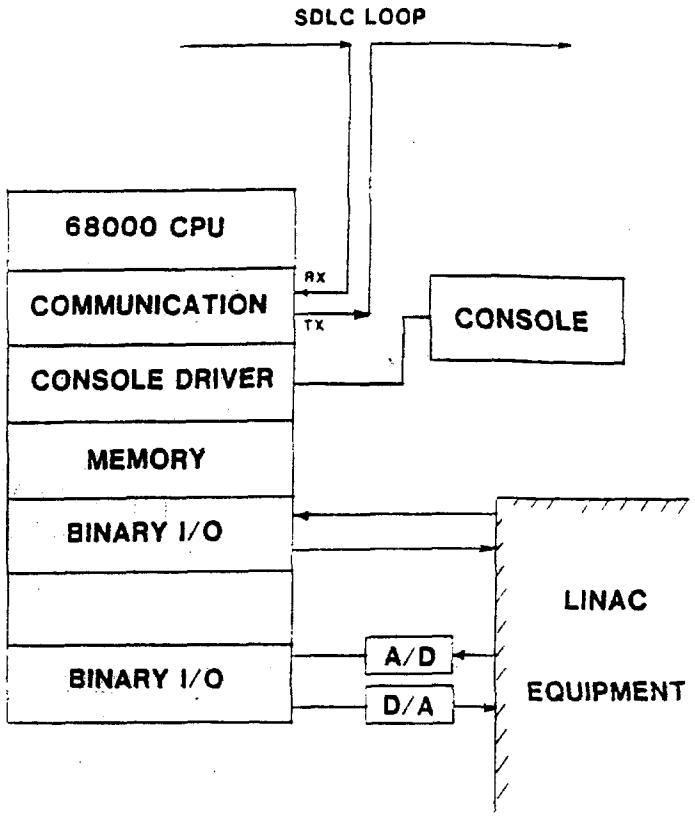

figure 12.3: secondary microprocessor architecture

and a communication board used for talking to the link, all housed in a *Multibus* bin (fig. 12.4).

The CPU board is a FNAL design that runs at 8 MHz. Secondary programs are contained in onboard ROM and are the same for all secondaries; thus all secondary CPU boards are interchangeable.

The magnetic-core memory board (CMOS RAM in some secondaries) contains fixed data tables and local database information in the first 12K bytes. This data is specific to a given station, so memory boards are not directly interchangeable. The remaining 20K are used for device readings, setting, nominals, tolerances, and SDLC communications.

One of the binary I/O boards (the *blue dot board*) is used for normal binary interface and the other (the *red dot board*) is connected to *OPTO22* devices providing one byte each of optical input and output, and to external D/A and A/D converters (the number of these converters varying from station to station).

The normal binary interface provides status and control of relays , stepping motors, and vacuum valves. A typical RF station requires seven bytes of binary I/O. Secondary B has a second blue dot board used to drive the stepping motors for the emittance probes at the downstream end of the 750 keV transport line.

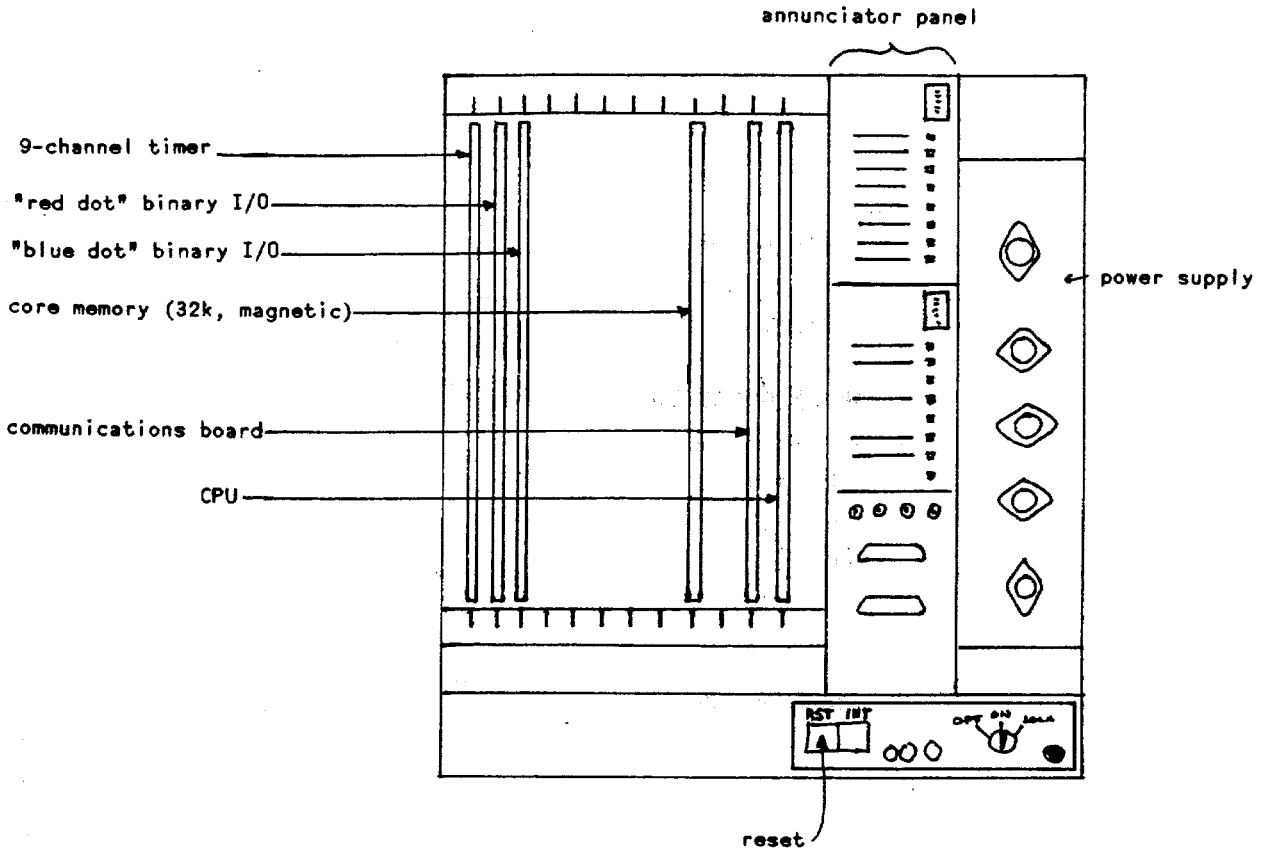

figure 12.4: secondary Multibus crate

The OPTO22 optically-coupled binary interface is used for signals that require isolation from local grounds or need to be amplified for special purposes, in particular the local connections to the hardwired beam enable line, and the beam inhibit line, which allows any secondary to inhibit beam without relying on the SDLC link (sec. 3.4).

External 16-channel, 12-bit, sample-and-hold A/D converters are used to digitize analog signals for monitoring. Each secondary has one to three of these A/D converters; usually all the A/D's in the linac are triggered simultaneously by the TDATA timing pulse. The analog input range for these A/D's is -10 to 10 volts. Secondaries that control RF systems (B, 1-9, and D) also have one A/D chassis with an input range of -2.5 to 2.5 volts for 4x resolution of RF signals. These A/D's are identified by red labels on the front panels.

All secondaries except A, D, and E also have external 16-channel, 10-bit D/A converters with 0-10 volt outputs. These are used to control source parameters, linac quadrupoles, and 750 keV line devices.

The D/A and A/D chassis are located in the rack below the multibus crate, except the H and I secondaries, which have D/A and A/D boards mounted in the Multibus crate, which is itself inside a Faraday cage to shield against electrical noise.

Each secondary has a predet timer board with a 2 MHz clock (phase locked to the hardwired 1 MHz booster clock coming from the preacc control room) and nine timers that may be independently set in 0.5 μsec increments to maximum delays of 16384 μsec. Three of these timers have divide-by-eight circuits and may be set to maximum delays of 131.072 msec with 4 μsec resolution. All the timers are usually referenced to the linac reset TZERO, but may also be triggered by each other.

The timer board in secondary #B (buncher) has a special function in that it produces the TDATA timing pulse used to trigger the A/D units in the linac. This is done so that the value of L:TDATA may be changed through the control system. The other TDATA pulse, produced by a predet in the preacc control room, is a backup in case the timer board in secondary #B fails. Switching between the two is a matter of changing a cable on a patch panel next to the Multibus crate for secondary #B. The signal is sent down the linac via a timing pulse repeater just as QUADS ON, RF ON, and TZERO are.

A watchdog timer with a delay of 150 msec is reset whenever a special register on the board is addressed. The normal operation of the CPU will cause this to occur every cycle (66 msec) as TZERO is received; if the register is not addressed and the watchdog times out, a system reset is generated, which should suffice to restore the secondary to periodic operation. If TZERO disappears, the secondary will reset itself every 150 msec until the reset returns.

The communication card serves two primary functions: it handles the serial I/O and video RAM for a local console (HDWREL 3), and interfaces the secondary to the local fiber optic link repeater chassis. The link repeater (fig. 67) is housed in a separate chassis with its own power supply; the secondary can be taken offline (bypassed) without affecting link data traffic. A switch on the front of the link repeater chassis will put it into bypass; it may also be put into bypass by flipping a dip switch on that secondary's *annunciator board* (the aluminum panel in the Multibus crate that shows the various interrupt levels), or if power to the secondary is lost, or if the cable between the link repeater and communication card is unplugged. The death of the link repeater has no effect on the secondary aside from isolating it from the rest of the control system.

The link repeater is also responsible for decoding the 1 MHz clock encoded on the link. This clock is not the same as the 1 MHz booster clock and is used for data transmission only. If the link should fail upstream of a given secondary, a clock built into that secondary's repeater will be enabled and used for transmitting data and a *beacon* message with the address of the secondary will be sent out on the link, for the benefit of the primary.

Each secondary operates synchronously with the 15 Hz repetition rate of the linac. Every 66 msec, the secondary reads all the analog and binary parameters in its area, updates lists of data for requestors that need data from its

area, scans the devices in its area to update the alarm conditions, adjusts parameters that are under software loop control, executes the application program (if any) selected by the operator of the local console, updates the local console display, makes any requested settings to local or remote parameters, and handles all communication with the SDLC link. (Whew!)

12.3 Primary Station

The primary hardware (fig. 12.5) is a bit different from the secondaries'. In addition to the standard core memory board, there is a 128K RAM memory board used to buffer data coming from and going to the hosts. There are two MC68000 CPU boards, one to drive the SDLC link and the other to drive the local console. Each CPU has a communication board; the board for the link driver CPU connects to the fiber optic link repeater chassis but not to the console, and the board for the console driver CPU connects to the console but not the link repeater. The CPU and communication boards are <u>not</u> interchangeable with their counterparts in the secondaries.

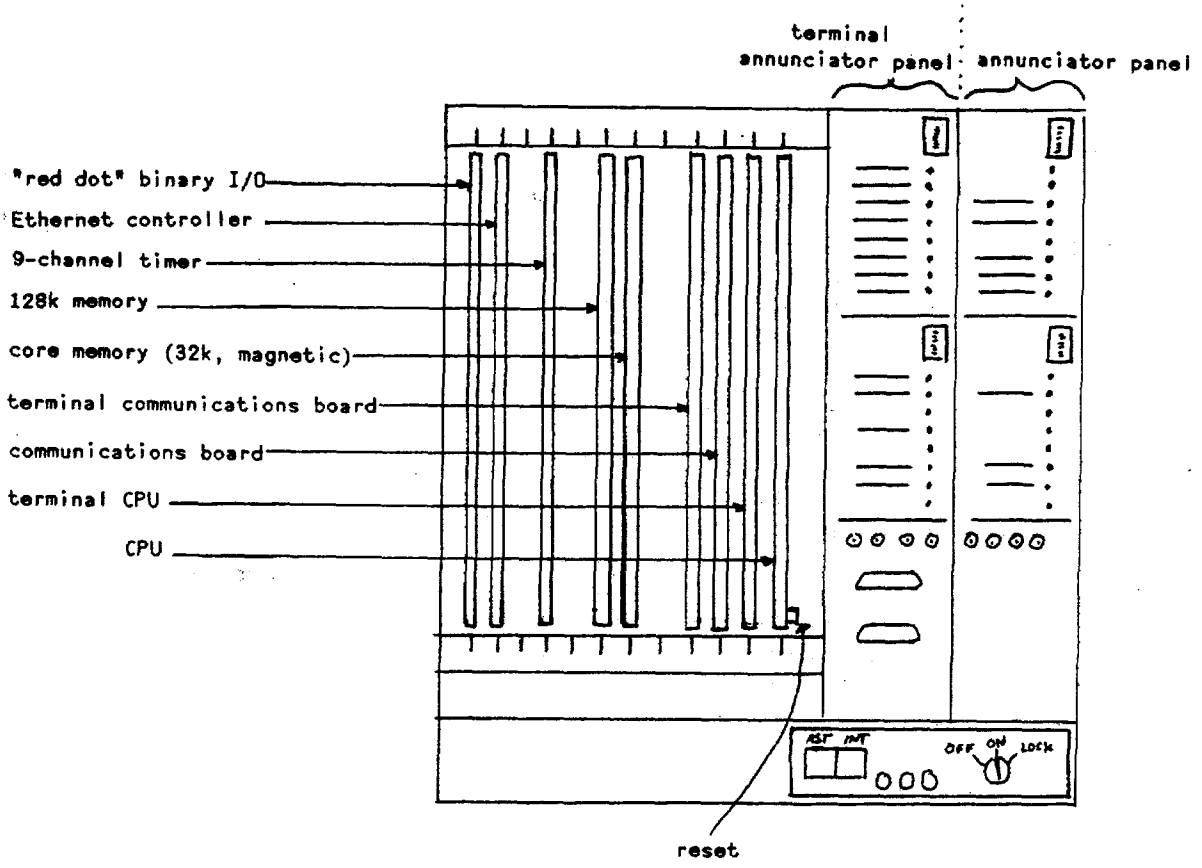

figure 12.5: primary Multibus crate

The console CPU board also has an RS-232 port that sends alarm messages to a TEC terminal in the same rack. The video output of this terminal is buffered and drives the scrolling linac alarm screen in the MCR.

The primary has two sets of console hardware; one is by the primary station itself, and the other is in the MCR. Only one can be driven at a time, selected by switching BNC cables on a patch panel below the primary.

A single red dot binary I/O board in the primary is used to inhibit beam by pulling the hardwire loop.

The *Ethernet controller board* handles communication on the link to the host computers. Ethernet is a half-duplex, 10 megabit/sec protocol, which is an international standard for intercomputer communications. The Ethernet system can in theory support up to 100 nodes, but in this application has only the primary and two hosts.

The fiber optic link repeater for the primary is also unique, because the primary communicates on the link in full duplex (simultaneous transmission and reception) rather than the loop mode used in the secondaries. This link repeater also provides the 1 MHz clock normally used for link communications.

The primary station initiates all traffic on the link- secondaries do not speak unless spoken to. At the direction of a host computer the primary will relay settings and requests for data to the secondaries, collect and organize the returned data, and return it to appropriate host. The primary polls each secondary every two seconds to see whether it is still online, and will create an alarm if any are not. The primary also looks for beacon messages from secondaries that would indicate a link failure. Note that an offline secondary will not generate a beacon.

12.4 Operating Modes

There are three modes of secondary operation. In the *local mode* the secondary controls the devices in its area without any help from any other computers. The local data base contains the names, titles, conversion factors, settings, nominals, tolerances, and control characteristics of all parameters in the local system. All the devices in that secondary's area may be controlled and monitored using the local console. The console also has a rudimentary plotting capability (sec. 12.6).

In the *global mode*, available when the SDLC link is up, any secondary can be used to monitor and control any device controlled by any other secondary, i.e., the entire linac (excluding some of the 200 MeV area). Aside from typing in different device mnemonics, the operation of the local console is the same as in the local mode. Communication through the SDLC link implies that the primary station and all link repeaters are functioning normally, otherwise link traffic stops. There is no direct communication between secondaries- all requests and responses go through the primary.

Communication between the secondaries and a host computer via the primary comprises the *gateway mode*, which is the most common mode of operation. One host is itself an MC68000-based station used for generating daily operational summaries used by the linac and controls support groups. It is located next to secondary 3. The other host is the linac *front end* PDP11/34 found in the cross gallery computer room. The front end interfaces the linac-dedicated control system to the Accelerator Control NETwork (*ACNET*) which provides monitoring and control of any and all linac parameters from ACNET consoles in the MCR and (shudder) elsewhere. The accelerator control system (see Introduction to the Control System by Dave Johnson) also provides data logging and alarm monitoring services. The linac front end issues data requests and commands to the primary station in order to satisfy the needs of the control system.

All three secondary modes are supported simultaneously; local control does not preclude remote control and vice versa.

12.5 Troubleshooting

Every CPU board is connected to an annunciator panel that is studded with LEDs. Normally most of these flash at 15 Hz. If no activity is seen, it may be necessary to RESET the CPU with the button so marked. If more than two bus errors occur in a row, the CPU will halt and try to restart itself. If more than fifteen halts occur in an hour, the CPU will halt and require a manual RESET. If there is no obvious problem (like a power failure) and the CPU fails to show activity after a RESET, call the controls group for help.

Constant 15 Hz activity should also be observed on the link repeater chassis, the A/D chassis, and the local console.

If a secondary has gone offline the primary will show an alarm to that effect and the link repeater (fig. 12.6) for that secondary will show a red BYPASS LED lit, with a yellow LED indicating the reason. TX CLK ENABLE is an indication that the local link repeater clock is enabled because the link has failed upstream. A secondary in this condition will be sending a beacon message with its signature to the primary; the primary is the only station with TX CLK ENABLE normally lit.

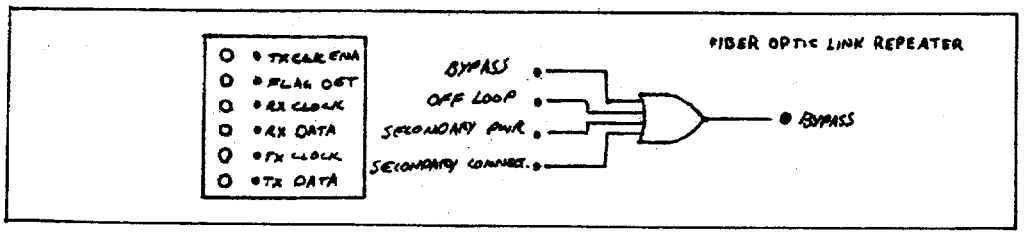

figure 12.6: fiber-optic link repeater

A small video screen above the primary will show the status of all the secondaries at a glance (fig. 12.7). Included is the number of data lists being requested by the hosts and other secondaries, the secondaries receiving data list requests, the secondaries transmitting data lists, the secondaries responding to the test poll, and the length of time required to collect all the data requested on that cycle.

If there is trouble with the primary or a secondary, the first thing to try is a RESET (located on the bottom right of the Multibus chassis). This starts the CPU from the first step of the program, as would cycling the power. Since analog and digital settings are stored in nonvolatile RAM, they are unaffected by crashes and power outages. The INT (interrupt) button merely causes the CPU to pause and then resume from where it left off, so it is of little value in a failure situation.

The secondaries in the high-voltage domes can be reset through the control system. To do this, type in channels G64 (H) or G65 (I) and interrupt under the RESET field. All other secondaries and the primary must be reset locally.

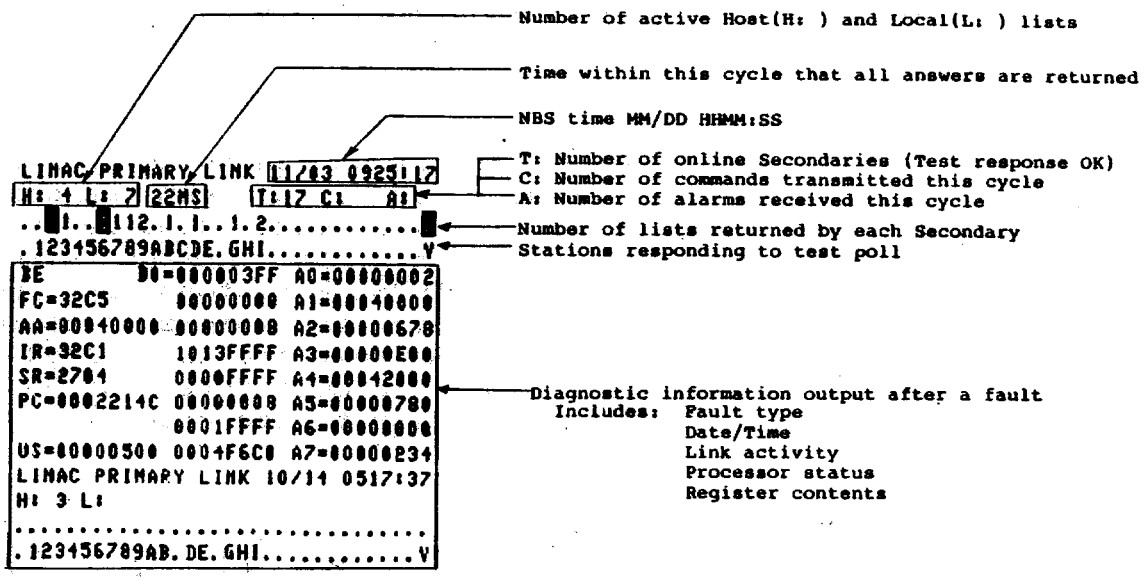

figure 12.7: primary link status display

If a secondary goes offline no data are available from it and local investigation is necessary. The offline condition can result from the secondary being powered down, halted, bypassed, reset, or caused by a faulty communication board or SDLC link problems.

The linac control system is nothing if not modular. Secondary components (except the link repeater) can be taken from secondary A (and secondary A subsequently bypassed). The binary I/O cards, CPU, and communication card should operate in any other secondary, as well as A/D and D/A chassis. The core memory board may be "known good" but it will have to be downloaded from the VAX when it is moved to

another station. Another source for secondary spares is from the test setup in the controls lab near RF station 2. A third source is a cabinet near the PA for RF station 2.

Primary spares are available only from the controls lab next to RF station 2. Remember the primary's link repeater is also unique. A good spare Ethernet board may be taken from the 68000 host near RF system 3.

IMPORTANT! Multibus uses printed circuit edge connectors, so the bin must be powered down to remove or insert cards. Also make a concerted effort to put the new board in the same slot as the old one (extra points for right-side-up).

External A/D and D/A chassis are easy to change, the only catch is that there is a chassis address switch on the back that must be set to match the address of the unit being replaced. Of course, the -10 to 10 volt input A/D's should not be mixed up with the -2.5 to 2.5 volt input A/D's.

All local consoles are identical and may be interchanged freely, but since all parameters are available from any console it is not necessary to change them just to establish control over a particular device.

A spare TEC terminal for the scrolling linac alarms monitor is located in the rack next to the active terminal.

12.6 Local Console Operation

The motion of the cursor on the screen is controlled by holding in either the up-down or left-right buttons and turning the knob (fig. 12.8). The same knob is used to change the value of a device when the cursor is in the number field. The INCREASE and DECREASE buttons may also be used, although they may be too fast for some applications, like running up RF gradients. A keyboard is mounted in a drawer beneath the screen, with two more interrupt buttons and a HOME key that sends the cursor to the upper-left hand corner.

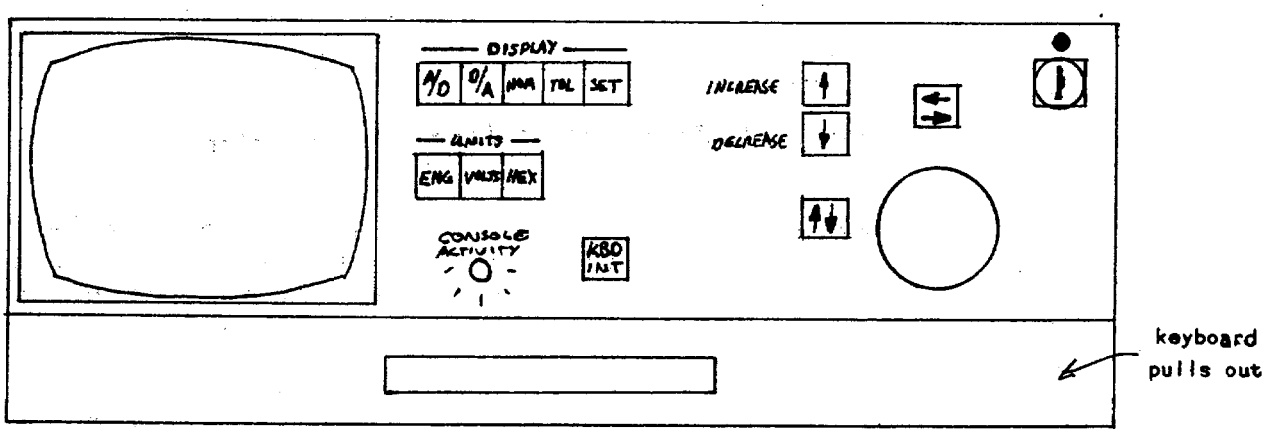

figure 12.8: local console

In this context, to "enter" a character or string of characters means to type them in on the keyboard and hit the keyboard interrupt.

Pages are selected as on an ACNET console: either move the cursor to the desired page title and interrupt, or enter the page number directly.

Up to fourteen channels of linac data can be displayed on the local parameter page, gathered from anywhere in the network. The mode switches select one particular aspect of the devices:

A/D	readbacks in thirteen-pulse averages
D/A	current settings
NOM	nominal value of channels in alarm scan
TOL	tolerance of channels in alarm scan
SET	D/A when line or page was initialized

In all cases the number field will be in reverse video if the channel is out of tolerance, blinking reverse video if it is inhibiting beam.

The unit switches select:

ENG	engineering units (amps, degrees, volts, percent)
VOLT	measured voltage from the A/D converter
HEX	raw data in hexadecimal (base 16)

Devices may be changed by knobbing or by entering a value in the number field, as with ACNET consoles. Pulses may be sent to stepping motors by holding down the "S" key.

The parameter pages are nominally set up with standard lists of local devices. A line may blanked by interrupting in the first column in the line. Entering two digits of the desired channel number and interrupting will call up the desired channel from the local system. Three digits will retrieve a channel from anywhere in the system, a complete device mnemonic does the same.

To blank a page from any line to the bottom, blank the line, type in four spaces, and interrupt.

To get sequential channels from an area, enter the first channel on a line, blank the line below it, and interrupt on the blank line. Holding the interrupt button down will cause sequential channels to appear on the remaining blank lines.

To get the same channel number from sequential areas, enter the first channel on a line, blank the line below it, type the next desired system number in the first column in the blank line, and interrupt. Holding the interrupt button down will cause channels from sequential systems to appear on the remaining blank lines.

To start a time plot, enter a "T" on line 13 (hit HOME and four up arrows to get to this line). Enter the y-axis device on line 14, and the desired scales on line 13 as indicated. The plot may be restarted by interrupting under the prompt.

To do a parameter plot, enter a "P" on line 13. Enter the y-axis device on line 14, the x-axis device on line 15, and the scales on line 13 as indicated.

In both cases the plot may be terminated by interrupting on the first column in line 13.

In addition to standard parameter pages, there are analog and binary descriptor pages, which show information about a channel not always displayed on a parameter page. The analog descriptor page shows the channel number and conversion factors for the channel in question, and also shows the setting of the alarm monitoring bits "A", "I", and "2".

If the "A" bit is set, the channel is included in the alarm scan and will cause an alarm if the readback goes out of tolerance. If the "I" bit is set the channel will inhibit beam if it goes out of tolerance and the "A" bit is set. If the "2" bit is set, two consecutive out-of-tolerance readbacks are required before an alarm or inhibit will occur. This is useful for filtering out nuisance alarms caused by a channel wandering out of tolerance for a single cycle.

The binary descriptor page shows the setting of the alarm monitoring bits "A", "I", "N", and "2". Setting the "N" bit toggles the nominal condition of the channel (0 or 1) no matter how the other bits are set.

13 LINAC SAFETY

Personnel hazards associated with the linac fall into two categories: electrical and radiation. Electrical hazards, in the form of RF systems and high-voltage power supplies, are not particular to the linac. Basic electrical safety is a topic too general to be discussed here. Radiation hazards posed by the linac are somewhat unique due to the construction of the linac enclosure and the nature of linac operation. A complete discussion of radiation hazards and appropriate safety procedures are found in the Accelerator Division Safety Manual, available in the MCR.

13.1 Radiation Hazards

Remanent radioactivity, caused by accelerated protons colliding with the linac structure, is negligible below energies of 10 MeV. There are thus no significant hazards from remanent radioactivity in the 750 keV line area (EXP 90), which may be accessed when the linac is in operation.

The most active area in terms of remanent radioactivity is the 200 MeV area. Highest rates occur near equipment that intersects the ion beam. The bending magnets and wire scanners are good examples of this. The NTF beamline is another "hot spot".

The walls of the linac enclosure are a concrete-soil-concrete sandwich ranging from 3' thick at the low-energy end to 12' thick in the 200 MeV area. In addition, soil is piled on top of the linac enclosure to form a shielding *berm* several feet thick. During normal operation, rates outside the linac enclosure are so small as to be unmeasureable.

An exception to the above rule is the area downstream of the NTF treatment area, in the lower linac gallery. Dose rates as high as 50-100 mR/hr have been measured there during NTF patient treatment (OPBULL 425). A "chipmunk" ionization chamber is permanently installed at this location to monitor neutrons and γ-rays, and warns personnel if rates exceed modest limits.

A second radiation hazard comes not from activation of materials by high-energy protons but from X-rays produced by the RF gradients in the linac cavities. *Bremsstrahlung* radiation is caused when high-energy electrons- like those formed by Haefely power supplies and RF cavities- are decelerated by the atomic nuclei in solid objects. RF cavities are particularly adept at producing this radiation, with dose rates as high as 2 R/hr measured at one foot from the cavity. Since most X-rays are formed at 70% of nominal gradient and above, rates in the vicinity of the cavities

are easily averted by turning the cavity gradients down to 50% of their nominal values and disabling the PA CROBAR bit on ACNET page L25 (sec. 14.1). This is standard procedure if any work is to be done near a linac cavity.

RF system modulators, too, are a source of X-rays. With proper shielding, normal rates around an operating modulator are less than 0.5 mR/hr. Since much personnel activity occurs in these areas, the modulator exteriors are surveyed every couple of months.

13.2 Linac Safety System

The status of the linac radiation safety system (*RSS*) is generated and displayed in the CARESS racks in the main control room. The ten controlled-access keys that open the gates to the linac enclosure are also kept there. Removing any one of these keys will inhibit the critical devices for the linac, preventing beam from being accelerated. A critical device failure for any other accelerator enclosure will likewise inhibit the critical devices for the linac (OPBULL 314).

The critical devices for the linac are the beam stop (primary) and pulse shifter (secondary) (OPBULL 694, 721). Their status is displayed on the linac RSS panel in the CARESS racks. There is no electrical safety system as such, and the RF systems are not interlocked. For this reason it is necessary to manually reduce the cavity gradients to 0.5 volts or less (OPBULL 404) when working in the vicinity of a linac cavity. Flashing beacons in the tunnel above each tank warn personnel in the tunnel when a controlled-access key is pulled and the gradient in the tanks is above 0.65 volts (OPBULL 282).

Lack of an electrical safety system also implies that no electrical devices (magnets, kickers, septa) are automatically turned off for an access (two exceptions- see below). It is the responsibility of personnel making the access not only to remain aware of the electrical hazards in the enclosure, but also to turn off and <u>lock off</u> any device upon which they plan to work. The 58° and 32° supplies for the NTF beamline will trip off when the safety system drops, but the above rule still applies.

The linac enclosure has four entrances: two at the upstream end of tank one, one between tanks 4 and 5, and one in the 200 MeV area. There are also 24 *penetrations* running from the lower linac gallery into the linac enclosure. The penetrations are 30" in diameter and carry the 9-3/16" transmission lines, power and signal cables, and water pipes. Some are shielded with lead (depending on the local neutron flux) and all are covered with metal plates and padlocked.

If it is necessary to access a penetration, a single "penetration key" is available in the main control room. This key is interlocked to the linac safety system in a unique way: if the key is removed, the linac safety system

drops, requiring a search-and-secure (OPBULL 396), beginning with a special interlock in the lower linac gallery by system 9 (OPBULL 1048). This is a reminder to check all the penetration covers (also in the lower gallery) to make sure they are locked.

If the penetration key has not been removed, the "special" interlock will not drop, and the search-and-secure may begin in the usual manner at the box in the upper linac gallery by system 9.

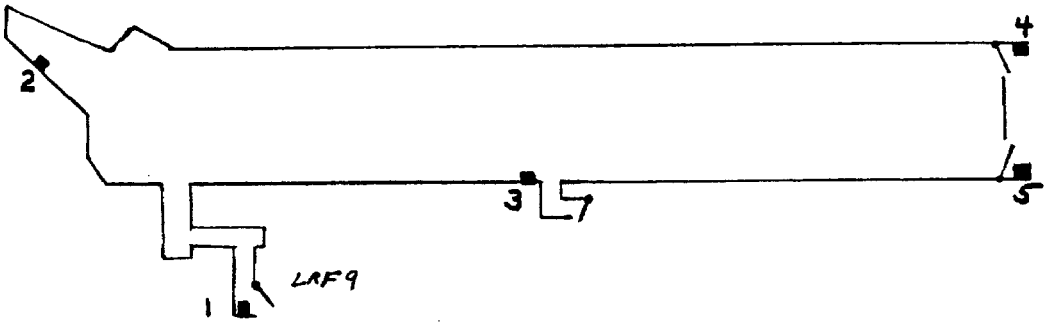

figure 13.1: linac interlock boxes

14 LINAC APPLICATIONS PROGRAMS

Most linac tuning is done through ACNET, using consoles in the MCR. An index page (fig. 14.1) lists all the applications programs available. Aside from parameter pages, two programs of the most interest to the operator are the RF system digital status page on L25, and the 200-MeV steering page on L36.

A display of the linac toroid outputs (showing the beam currents all along the linac) may be had by going to a parameter page, toggling the plot package options to INJ, and interrupting under *LIN_TOR (fig. 14.2) in the right-hand corner.

```
                         TUE  11-FEB-86  10:48

L                       LINAC/PREACC INDEX PAGE          *PAGE  *COPIES*
        PARAMETERS                RF  STATIONS                I-  SOURCE
  2 RF SYSTEMS          25 LINAC RF STATUS          48 I- SOURCE PARAMS
  3 RF SURVEY           26                          49
  4 PARAMETER           27                          50
  5 CTF PARAMETERS      28                          51
  6                     29                          52
  7                     30                          53
  8                     31                          54
  9                     32                          55
       DIAGNOSTICS      33                                H-  SOURCE
 11 LINAC ANALOG DATA        STEERING / QUADS      57 H- SOURCE PARAMS
 12 LINAC BINARY DATA   35                          58
 13 LINAC MEMORY DATA   36 LINAC STEERING           59
 14 LINAC I/O TEST      37                          60
 15 LINAC ANALOG PREV   38                          61
 16 LINAC CORE MEMORY   39                          62
 17 LINAC DESCRIPTORS   40                          63
 18 LINAC TANK QUADS    41                          64
 19                          EMITTANCE MSMT              MISCELLANEOUS
 20                     43 200-MEV WIRE SCANS      66 CTF MISCELLANEOUS
 21 PREACCELERATOR      44 WIRE CHOMP              67 E-Z WRITER
 22 GENERAL STATUS      45 EMITPLOT                68
 23                     46 EMITTANCE (LOW EN)      69 TOROID PLOT
```

figure 14.1: linac index page

Besides the 750 keV and 200 MeV line toroids, there are toroids mounted at the downstream end of tanks 2-9. A toroid plot is useful in situations where the linac beam disappears in that it shows where beam was last seen. Analog readbacks are also available on L3, subpage TOROIDS.

Loss monitors are also available in tanks 4-9 and the 200 MeV area to show how much beam is being lost in their areas. The downstream end of tanks 4-9 each have a loss monitor near the center axis of the tank and one on top of the tank. Tank 9 loss monitors are useful when tuning the 750 keV lines, as they are more sensitive than toroids to variations in beam intensity (although their output may vary for reasons unrelated to linac transmission). 200 MeV loss monitors are useful when tuning the straight-ahead dump line

for emittance measurements. The readouts for these monitors are available through hardwired spigots in a patch panel near ACNET console #7, and on page L3, subpage LOSSES.

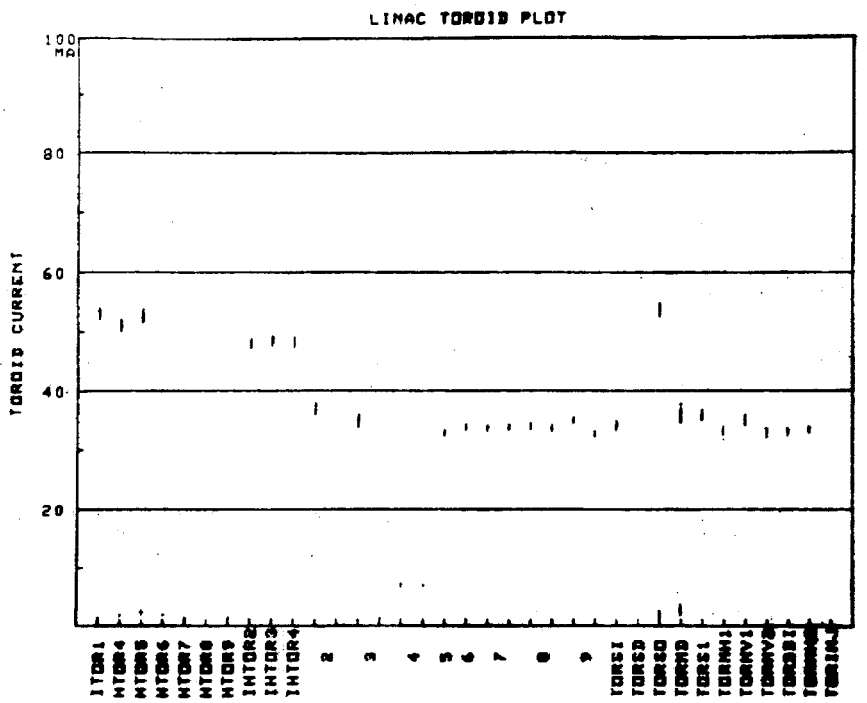

figure 14.2: toroid plot

14.1 L25: Linac RF Status

Digital status bits from the linac RF systems are displayed here (fig. 14.3). "Good" bits are represented as green dots, while "bad" or "naughty" bits are red numbers, corresponding to the system number. Some bits are controllable through the computer system; these have yellow dashes after their names, and will be discussed here.

Comp Enbl	Computer enable. Setting this bit turns the modulator pulse off and inhibits the auto-reset function.
Reset Rdy	Reset ready. Interrupting on this bit resets the RF station, the same as the blue **OVERLOAD** button on the A5 console.
System HV	This turns the modulator high-voltage on, the same as the big red button on the A5 console.
VVL Open VVL Close VVH Open VVH Close	Remote control of low- (VVL) and high- (VVH) energy end vacuum valves.

```
                    WED  15-JAN-86  12:51

L25 Linac RF Status     Data
Test Poll.123456789ABCDE.GHI............V     List Err: 0000      3

Pulse Off 123456789.    Ipa An OV ..........  Beam Inhib..........
Comp Enbl-..........    Dr Scr OV ..........
Dr RF Lo  .2........    Dr An OV ..........   Auto-Enbls:
Perm Inh  ..........    Dr Crobar ..........  Dr Reset -..........
PA Crobar ..........                          Perm Inh -..........
Reset Rdy-..........    Freq CW   ..........  QPS Reset-..........
                        Freq CCW  ..........  PA Crobar-123.......
PA Water  ..........                          Auto-Grad-123456789.
Mod Water ..........    VVL Open -..345.....  Auto-Phas-1.........
Dr Water  ..........    VVL Close-....5.....
Dr Ready  ..........    VVH Open -.23....9.
PA Fil Lo ..........    VVH Close-.2......9.
Mod Rdy   ..........    VV Local  ..34....9.
Hvps Rdy  ..........
System HV-..........    Rad System ..........

PA Fil OC ..........    Dt Water  ..........
PA DC OV  ..........    QPS Intlk-123.......
PA Cth OV ..........    LEE Ipps  ..3.......
PA HVXfmr ..........    HEE Ipps  ..3.......
```

figure 14.3: L25: linac RF status

QPS Intlk — Quadrupole power supply interlock. Interrupting under this bit sends a reset to all the quad power supplies in that system. This will not reset a blown breaker.

Dr Reset — Driver reset. Setting this bit inhibits the automatic reset of a driver overload.

Perm Inh — Permanent inhibit. The permanent inhibit function includes an automatic reduction of cavity gradient to half value if a reset is not performed within 30 seconds. This is done to keep the RF from being turned on too fast after the cavity has had a chance to cool down. Setting this bit inhibits the gradient reduction function.

QPS Reset — Quadrupole power supply reset. Setting this bit inhibits the automatic reset of quad power supplies in that system.

PA Crowbar — Setting this bit inhibits the automatic reset of a PA crowbar, which includes running the gradient back up to 0.8 volts after the system has reset. For this reason this bit should be set when accesses to the linac enclosure are made.

Auto-Grad — Automatic gradient regulation. Setting this bit inhibits computer regulation of gradient levels above 0.8 volts.

Auto-Phas — Automatic intertank phase control. Setting this bit inhibits computer control of RF system phase, used to regulate intertank phases to minimum levels. Always disabled for system 1.

An important note: the Auto-Grad and Auto-Phas controls should be inhibited whenever the timer L:TDATA is changed from its nominal value of 2000 (or so) μsec. The software that regulates the gradients and phases samples these values at L:TDATA time, and chaos will result if L:TDATA is not occurring during the RF peak. NEVER change the nominal setting of L:TDATA.

14.2 L36: Linac Steering

This page (fig. 14.4) provides automatic measurement of beam positions at the beginning of the 200 MeV transport line, as well as calculating corrections to the steering trim magnets (sec. 8.3) that should center the beam.

Interrupting under *Find Beam Positions automatically runs in wires 200-1 and 200-2 (wire scanners 1 and 2 in fig. 8.1). The computer initiates 15 Hz beam to make the scan (via the Smeds module). At the end of the scan, interrupting under *CALC and *SEND will calculate and send the corrections to the trim dipoles. A second scan is then done by interrupting under *Find Beam Positions again.

```
                WED  15-JAN-86  12:52

L36   LINAC STEERING     I- 200 MEV      *

 Wire 200-1 Position                      CM
 Wire 200-2 Position                      CM


*Find Beam Positions   HORZ     VERT
      WIRE 200-1      -.003   -.012   CM
      WIRE 200-2      -.012   -.003   CM


*CALC HORZ  *SEND      D/A     A/D
 Horz Trim Tank 6-7     /             AMP
 Horz Trim Tank 7-8                   AMP

*CALC VERT  *SEND      D/A     A/D
 Vert Trim Tank 6-7                   AMP
 Vert Trim Tank 7-8                   AMP

*Display Previous Trim Values


 Steering Last Checked 01/08/86 at 0539
```

figure 14.4: L36: linac steering program

It should be noted that the trim supplies are so small that D/A values of 10 or greater will probably not have the desired effect on the beam positions. If the program cannot center beam without turning a trim on that hard, the 750 keV line should probably be retuned.

Steering should be checked before and after any 750 keV line tuning, before any 200 MeV line or booster tuning, before any momentum scans are done, and once per shift to forestall the natural tendency for the positions to drift.

15 LINAC CHRONOLOGY

The sequence of events that occur in an HEP beam pulse are listed here. All times are referenced to a phase reversal on the booster phase reversal clock, which occurs about 2 msec before the guide field minimum in booster. All times are given in microseconds, and may represent approximate values.

0	TZERO system reference timer, timing board reference for all secondaries except G, H, I
10	spectrometer A/D hold trigger
18	QUADS ON quadrupole power supply trigger
50	pulse shifter input. Up to this time the pulse shifter has been deciding whether or not to shift. For a beam pulse, the TZERO-equivalent reset is sent to the G, H, I secondaries at this time.
750	source gas valve opens
860	source gas valve closes
1000	most linac scope triggers
1100	quadrupole power supplies start to ramp
1700	RF4 NTF enable detection trigger- if an NTF enable does not exist at this time the pulse for RF station 4 will not be allowed to shift
1755	RF ON- RF system reset
1795	(variable) modulator start pulse, driver start pulse, mixer gate opens to allow RF to amplifier chain
1800	referenced to above event- modulator ramp starts, crowbar compare level goes high
1910	source extractor on
1920	Haefely voltage sampled
1928	referenced to mod ramp start- full RF gradient reached

1935 source arc on- beam in preaccelerator column

1983 750 keV chopper on tube fires- beam in linac

2000 TDATA hold trigger for all linac A/D units; A/Ds for sources and two A/Ds at secondary G track the shifted pulse- for a beam pulse they coincide with unshifted A/Ds.

2013 750 keV chopper off tube fires- linac beam ends

2020 source arc off- beam pulse ends

2025 source extractor off

2050 (variable) quadrupole power supplies commute

2078 (variable) RF gradients start to ramp down

2200 referenced to above event- modulator pulse ends, crowbar compare level goes low

2235 (variable) driver stop pulse, mixer gate closes

2295 referenced to mod start pulse- second driver stop pulse

3000 μP reset for all secondaries and primary- primary counters start, secondaries collect data

3100 quadrupole currents reach zero

8120 index poll time- primary requests data indexes from secondaries

13240 answer poll time- primary requests data from secondaries

16000-21000 secondaries finish sending data to primary

33720 command poll time- primary requests commands from secondaries

38840 test poll time- primary polls secondaries to see if they answer

54200 alarms poll time- primary requests alarm status from secondaries

66000 new cycle begins

GLOSSARY

3383 sequencer One of the modules in the buncher low-level RF system, which produces the times necessary for defining the pulse and running the system. Sends pulses to 3384 reference pulse generator and the bias pulser for the 7651.

3384 reference pulse generator One of the modules in the buncher low-level RF system, which defines the RF pulse envelope according to times sent from the 3383 sequencer.

4-gap pulse stretcher A module that stretches 4-gap pulses so that the prom module will recognize them and inhibit beam on 4-gaps.

4616 Linac RF driver PA tube, with an output of 200 kW. Cathode driver for the 7835 PA tube. Manufactured by RCA.

4800 output module Last module in the buncher low-level RF system before the mixer and amplifier chain. Driven by 3384 reference pulse generator and feedback from cavity gradient.

7651 Linac IPA2 tube, with an output of 2 kW. Drives 4616 driver tube. Manufactured by RCA.

7835 Linac PA tube, with an output of 4 MW. Drives linac RF cavity via 9" coaxial transmission line. Manufactured by RCA.

abort logic/pulse shifter interface Produces status of main ring and tevatron abort loops. Input to keyswitch module.

accelerating column Set of seven titanium electrodes (eight gaps) arranged in Pierce geometry to accelerate ions to 750 keV. Situated between -750 kV dome and pit wall.

achromatic Quality of a transport line or optical system where particle momentum has no effect on its trajectory through the system.

ACNET Acronym for Accelerator Control NETwork. A system of computers that monitors and controls the accelerator complex. Interfaced to users through consoles in the MCR and elsewhere.

air ionization chamber Devices used by NTF to monitor neutron flux during patient treatment.

amplitude control module Linac low-level RF system component that controls the amplitude of the RF gradient by varying the size of the modulator input pulse.

annunciator board Status panel in linac primary and secondary microprocessors showing status and interrupt levels.

auto-gradient Feature where the linac RF gradients are controlled by computer through the amplitude control module. Normally engaged.

beacon Message on serial data link flashed by a secondary microprocessor when the link repeater upstream of it fails.

beam inhibit light link module Module through which the H and I secondary microprocessors can pull the beam inhibit line.

beam loading Phenomenon whereby beam being accelerated by an RF cavity changes the gradient and phase of the RF in the cavity.

beam stop Linac primary critical device in the 750 keV line that blocks the beam path to prohibit beam in linac. Controlled by CARESS and the pulse shifter.

beam switch Toggle switch that will inhibit linac beam on HEP pulses. Eight of these are found in the MCR.

beam turns The width of the beam pulse going to booster divided by the revolution period of the booster at injection.

beamline microcomputer An NTF computer that monitors beamline devices, dose rates, and communicates with the NTF medical microcomputer as well as the local linac secondary.

belly pan A design feature of the linac tanks that allows leaks in the tank welds to be put under vacuum.

Benelex A substance similar to G-10 used to hold NTF neutron collimators in position.

berm Earth shielding over the top of a radiation enclosure.

bias pulser A module that drives the grid of the 7651 tube in the buncher RF system.

bleeder resistors In the linac application, the resistors between the high-voltage dome and ground that bleed down the charge on the dome when the power supply is turned off. 4250 MΩ.

blue-dot board Binary interface board in a linac secondary microcomputer.

bouncer circuit Haefely-designed system used to boost dome voltage to compensate for charge leaving the dome during the beam pulse. Not installed at FNAL.

bremsstrahlung X-ray radiation caused by deflection of high-energy electrons by atomic nuclei.

bulk tuner A long copper bar, D-shaped in cross section, that runs the length of a linac RF cavity and roughly determines the correct cavity volume.

CARESS Acronym for Central Accelerator Radiation and Electrical Safety System. Hardware dedicated to monitoring and controlling the accelerator safety systems and critical devices. Independent of any other control system. Located in and below the MCR.

centroid Technically, the center of mass. Used here to describe the center of a beam profile.

cesium boiler Electrically-heated crucible in the dome used to vaporize cesium used to coat the source cathode.

chop time selector Module in the preacc control room that selects times generated by predets and sends them on to the 750 keV choppers.

chopper Electrostatic device that selectively deflects a portion of the beam pulse to control intensity in the linac or beam turns in booster. Two are found in the 750 keV lines, and one in the 200 MeV area.

chute Passageway leading from the 200 MeV area to the booster radiation enclosure. The 200 MeV transport line to the booster travels through this.

clock generator Modules in the preacc control room (one for H-, one for I-) that take the 1 MHz clock and convert it to light pulses to send to the domes via fiber optic cables.

clock module Module in the preacc control room that converts all the phase reversals on the booster clock to 1-gaps, as well as providing backup 15 Hz and 1MHz clocks for the linac in case the booster clock fails.

Cockcroft-Walton accelerator A high-voltage DC accelerator, especially for the acceleration of protons. The DC voltage is produced from a circuit of rectifiers and capacitors to which a low AC voltage is applied.

computing counter A device that measures pulse frequencies with great accuracy. Used for the display of the linac master oscillator frequency.

corona rings Curved metal surfaces shielding the outside of high-voltage devices to forestall the ionization of air by electric discharges. Used in the HV sources for the preaccelerators.

coupling capacitor A capacitor used to couple AC voltages to parts of an electrical circuit while blocking DC voltages.

critical device failure A safety system condition where the radiation safety system (RSS) for an area drops before the critical device for that area has been turned off to remove beam from the area. Results in a pulse shifter inhibit and must be reset at the CARESS racks.

crowbar compare circuit Modulator and PA protection circuit that shuts down the RF system if the current from the modulator to the PA anode exceeds certain limits.

data selector Part of the monitor/control module for the Haefely power supply which selects either the voltage readback or the command voltage for display on the front of the module.

dispersion Quality of a beam transport system at a given point that defines the variation of the transverse position of the beam with variations in beam momentum. Usually expressed in meters.

divergence The angle that the trajectory of each particle makes with the beam axis. Accelerator systems always try to reduce beam divergence.

dogleg A shifting of the beam axis by a pair of dipole magnets, such that the initial and final beam axes are parallel.

dome A large rounded box, maintained at a high potential, that houses the ion source and supporting equipment in a preaccelerator.

drift tube A long copper torus, containing a quadrupole magnet, through which beam passes during acceleration in a linac RF cavity. The beam is shielded from the electric field in the cavity while in the drift tube, and is accelerated by the field while passing between drift tubes.

drive loop Termination of the coaxial transmission line leading from the PA to the RF cavity, which couples the energy in the transmission line to the magnetic fields in the cavity.

driver See 4616.

duoplasmatron A type of ion-producing source that develops protons by extracting positive ions from an arc struck in hydrogen gas. The I- source used to be a duoplasmatron; both sources are now magnetrons.

electron-volt Unit of energy equal to the energy gained by an electron as it falls through a potential of one volt.

emittance probe Device used to measure the size of the phase space ellipse occupied by the beam, done by measuring the divergence of the beam at a number of points across the beam axis.

enable A request for beam sent to the prom module in the preacc control room. Three types of enables exist: HEP, NTF, and P-bar.

Ethernet controller board Board found in the linac primary microcomputer that handles communication with the Ethernet link.

Eurobus crate One of two small crates in the preacc control room containing cards used to interface the local microcomputer to the Haefely power supply controls.

extractor An electrostatic device used to extract ions from the magnetron ion source, consisting of a pair of plates mounted beneath the source connected to a pulsed power supply.

fiber-optic link repeater Chassis associated with primary and all secondary microcomputers that maintain continuity of the serial data link and control the microcomputers' interfacing with it.

filament regulator gating module Module behind system 6 that tells the inductrols to regulate or not regulate, depending on timing pulses associated with the main ring ramp. Due for modifications (3-86).

field lamp Light source between the NTF primary and main collimators designed to duplicate the profile of the neutron beam with any given collimator insert. Used in patient set-up.

foreline A vacuum line leading from a vacuum pump to the device or devices to be pumped.

forward power The power transmitted from one stage of an RF system to the next, which may not represent the full power of the first stage due to power reflected from the second (reverse power).

frequency control and phase lock module Module in the low-level RF system that provides RF input to the amplifier chain at the correct phase.

frequency control module Module in the low-level RF system that commands the tuning slug controller in response to error signals that represent the difference between the transmission line RF phase and the cavity RF phase.

front end A PDP11/34 computer that interfaces with a specific accelerator system, responsible for collecting data required by ACNET. The linac front end communicates with the primary microcomputer via an Ethernet link.

G-10 A green glass-epoxy electrical insulator material used throughout the laboratory.

Gannon box Another name for the NTF interlock module, built by Jeff Gannon.

gas barrier A ceramic insulator in the 9-3/16" transmission line that isolates RF cavity vacuum from the nitrogen that pressurizes the transmission line.

gate valve controller A module in the preacc control room which shows the status of the 750 keV line vacuum valves and permits local control of those valves. Also the module at each cavity that monitors the ion pump power supply status and controls the vacuum valves at each end of the cavity.

gateway mode One of three modes of linac control system operation where data requests and commands from the front end are serviced by the secondary microcomputers.

global mode One of three modes of linac control system operation were data requests and commands from secondary microcomputers are serviced by other secondaries.

gradient A measure of the electric field amplitude in an RF cavity. Usually expressed in percent of nominal.

gradient regulator Module in the modulator pulse-forming circuitry that acts to keep RF cavity gradient at the desired level.

Haefely Trade name for a Swiss company that manufactures high-voltage equipment. In this application, the high-voltage power supply that maintains the preaccelerator dome at -750 kV.

host One of two computers that communicate with the primary microcomputer on the linac control system Ethernet link. One host is the front end, the other is a 68000-based computer used for generating status lists for the linac support group.

ignitron Device found in modulators used to dump the capacitor bank voltage in the event of a PA crowbar. An ignitron passes electrical current to a pool of liquid mercury at ground potential.

inductrol Voltage regulator for the PA filament supply that compensates for variations in line voltage due to other large loads a the laboratory.

intertank phase A signal that represents the difference in phase of two adjacent RF cavities in the linac.

ion gauge A vacuum-measuring gauge that works by ionizing gas molecules with electrons and measuring the amount of ion current drawn to an anode.

ion pump A type of vacuum pump that works by ionizing gas molecules with electrons and catching the ions on a titanium anode. Used at pressures of 10^{-4} torr or less.

ionization gauge controller One of two ion gauges in the preacc control room that monitor column vacuum and control the vacuum valves leading to the columns, as well as being interlocked inputs to the 750 keV chopper supply controllers.

IPA Acronym for Intermediate Power Amplifier. An intermediate level of amplification in the high-level RF system. The 400 W solid-state amplifier is the first IPA, and the 7651 tube is the second IPA.

isocenter One of two points in space defined by alignment fixtures in the NTF set-up and treatment rooms. Patient set-up is usually done on the premise that the area to be treated will lie at the isocenter.

isoplane An imaginary plane perpendicular to the neutron beam axis and containing the isocenter. Used in NTF patient setup.

keyer A solid-state device providing the first stage of amplification in a linac modulator. The light-pipe input to the modulator is amplified to about 1 kV by the keyer.

keyswitch module Also known as the pulse shifter controller module. This module produces an HEP enable to be sent to the prom module. Keyswitches on the front of the module selectively bypass beam switches in the MCR, as well as other inputs to the module.

klixon A temperature-sensitive electrical switch used in interlock circuits of power supplies and magnets that opens when a certain temperature is exceeded.

ladder control Obsolete method of controlling quadrupole power supplies whereby the settings of a few supplies determined the settings for a number of others. No longer used.

LCW Acronym for Low Conductivity Water. Water that has had the free ions removed in order to increase the resistivity of the water to 9 MΩ/cm or greater. Found in the 55° and 95° systems used to cool linac components.

linac 68k μP beam inhibit module Module in the preacc control room that sends the beam/no beam status to the linac secondaries, and causes a beam inhibit if one of the secondaries or the primary pulls the beam inhibit line.

linac steering Procedure whereby beam is aligned at the head of the 200 MeV transport line by steering dipoles between tanks 6-7 and 7-8. Can be performed automatically by ACNET page L36.

linlock line Vacuum valve status input to the prom module and pulse shifter, powered by a small 5 volt supply at RF station 9. Vacuum valve controllers at each station short out the line whenever a valve closes, inhibiting beam.

LLPA Acronym for Low Level Power Amplifier. 5-watt solid-state amplifier in the rear of the A5 racks that is the first step in the high-level RF system.

local mode One of three secondary modes where the secondary microcomputer satisfies data requests and commands from the local console.

longitudinal transit time factor Ratio of the energy gain of particle traversing a cell with a constant electric field to the energy gain of a particle traversing a cell with a sinusoidally-varying electric field. Simple, no?

magnetron Ion source that produces negative ions by extracting them from a plasma formed by an electric arc formed in hydrogen gas. Used in H- and I- sources at FNAL.

main collimator NTF collimator assembly following the primary collimator and containing inserts to shape the neutron beam to the desired size.

Manchester (encoding) System of data encoding on a bipolar clock used in serial data link communications in the linac control system.

master oscillator Oscillator that provides the RF signal for all linac RF systems. Typically runs at 201.24 MHz.

mechanical phase shifter Device strung between RF cavities with inputs from each cavity, which produces the intertank phase signal used for phase regulation.

medical microcomputer NTF computer that drives the NTF console and interfaces with the beamline microcomputer.

metering resistor Precision resistor-capacitor network used for measuring the voltage on the preaccelerator dome. 2125 MΩ.

MIL-STD-1553B Digital multiplex data bus standard used for interface between secondary #G and Eurobus crate cards that control the Haefely power supplies. Originally developed by the U.S. military.

mixer Final component in low-level RF system that passes the RF signal to the amplifier chain when gate signal arrives from waveform generator/sequencer.

mod block Premature termination of a modulator pulse triggered by a modulator current of greater than 400 amps during the pulse.

modulator High-voltage device connected to the anode of the PA that controls the RF output to the cavity. The modulator consists of three nested amplifiers with a final output of 30 kV at 350 A.

modulator regulator Module that regulates modulator current to maintain constant RF cavity gradient.

monitor/control module Module in the preacc control room that monitors voltage on the preaccelerator dome, digitizes it, and sends it along with the command voltage to the regulator/oscillator module to complete the voltage regulation feedback loop.

monitor/inhibitor module Module that oversees a number of RF system interlocks and inhibits the modulator pulse if conditions warrant.

monitor unit Artificially-derived unit used by NTF to define neutron dose rates.

Multibus IEEE standard format for microcomputer systems hardware. The crates that house the primary and secondary microcomputers conform to this standard.

NTF Acronym for Neutron Therapy Facility, a medical facility investigating the treatment of malignant tumors with neutrons. Neutrons for the facility are generated by steering 66 MeV ions from the linac into a beryllium target.

NTF beam control module The module in the NTF control room that actually initiates beam when two switches on the front panel are pressed simultaneously.

NTF interface module Modules located at RF systems 3 and 4 that sense the time of the RFON pulse. The module at system 4 will send an RF4 INHIBIT to the NTF interlock module if the RFON pulse at system 4 does not shift at the proper time.

NTF interlock module Also known as the Gannon box. This is the locus of all the NTF interlocks. The logic for producing an NTF enable is contained in this unit, which then sends the enable to the prom module. The interlock module also drives the status modules in the NTF control room and the MCR.

NTF status module Module that shows the status of the NTF interlocks, generated by the NTF interlock module. The module in the MCR also has keyswitches and toggle switches that are themselves part of the interlock chain. The module in the NTF control room has status only.

object Optical term referring to one focus of a dipole magnet. Parallel beams entering a dipole will cross at the object.

off tube One of two thyratrons that control the operation of a 750 keV chopper. After the on tube fires, the off tube fires to ground one side of a series capacitor and draw one of the chopper plates from ground to a negative potential.

on tube One of two thyratrons that control the operation of a 750 keV chopper. The on tube fires to bring one of the chopper plates from a high potential to ground. The off tube fires at a later time.

optical isolator An element in an electrical circuit that converts a signal to a light pulse at one point in the circuit and then back again in another in order to isolate the grounds of each part of the circuit from each other.

OPTO22 Device which converts a binary signal to a light pulse. Found in the red dot binary I/O boards in the linac secondaries.

PA crowbar RF system trip that occurs when the modulator current is greater than 600 amps during the RF pulse or 125 amps between pulses. A PA crowbar fires the permanent inhibit, shorts the capacitor bank to ground through the ignitron, and resets automatically after 30 seconds.

penetration One of 24 short tunnels leading from the lower linac gallery into the linac enclosure. The transmission lines, water lines, electrical and signal cables pass through the penetrations.

permanent inhibit RF system trip caused by four sucessive mod blocks in a row. A permanent inhibit shuts off the modulator pulse and shuts down the high-voltage power supply for the capacitor bank.

phase comparator mixer An element of the low-level RF systems that looks at the relative phases of two RF signals and produces a signal proportional to the difference in phase.

phase lock input Output of a phase comparator mixer that looks at the desired RF phase and the cavity RF phase. This signal is raised by 5 volts to produce phase lock output.

phase lock output Signal proportional to the difference between the desired RF phase and the cavity RF phase, used to drive a phase shifter that compensates for shifts in cavity RF phase due to beam loading.

phase reversal A method of encoding data on a clock where the shifting from one level to the other is shifted in phase for a number of cycles. The number of cycles for which this reversed phase exists constitutes the data being transmitted.

phase space A six-dimensional space consisting of position and momentum in each of three orthogonal directions.

pickup loop A small (1/8" square) loop at the end of a coaxial cable that is driven by the RF cavity magnetic field to produce a signal proportional to the electric field in the cavity.

piezoelectric crystal A symmetric crystal that bends when an electric potential is applied to it (or vice versa). Used in the ion sources to regulate the gas flow into the source. A piezoelectric crystal is also the heart of a crystal oscillator, such as the master oscillator.

pig gauge Penning Ion Gauge. A type of ion gauge used to measure vacuum and control valves in the 200 MeV area.

pit A large temperature- and humidity-controlled room containing the Haefely high-voltage transformers, voltage multiplier, preaccelerator dome, column, and motor-generator for a preaccelerator.

plasma A high-temperature mixture of ionized atoms and electrons.

post coupler A copper stem with a tab on the end that is used to control the relative field levels in two adjacent cells in a linac RF cavity.

preaccelerator Generally refers to all the hardware associated with the production of 750 keV ions, including the source itself and the Haefely power supply. The general layout is of the Cockcroft-Walton type.

predet A standard module that produces timing pulses referenced to specific phase reversals on an incoming clock. The delays of the output pulses are set by thumbwheels on the front of the module and may be as short as 1 μsec.

prepulse A 4-gap phase reversal on the booster clock that commands the 200 MeV, booster, and 8 GeV pulsed devices to fire in preparation for a beam pulse. Linac beam is not allowed on prepulses.

primary collimator The first collimator after the beryllium target used to produce neutrons for NTF. The primary collimator is made of steel and is of fixed geometry.

primary critical device The principle device that determines whether or not beam will enter a certain enclosure. Critical devices are controlled by the safety system, as well as through the control system. The primary critical device for the linac is the beam stop in the 750 keV line. The secondary critical device for the linac is the pulse shifter.

primary microprocessor Choke point of the linac control system that controls messages on the serial data link, and interfaces with the host computers via the Ethernet link.

prom module Logic module in the preacc control room that looks at the various beam enable inputs and decides which, if any, will produce a beam pulse. The prom module also selects the chop width to be sent to the choppers.

pulse interlock module Component in the modulator pulse-forming circuitry that will inhibit the modulator pulse if conditions warrant.

pulse repeater Module immediately after the pulse shifter in the preacc control room that sends the pulse to the chopper predets, the H- and I- clock generators, two of the A/D units for secondary #G, and secondary #G itself.

pulse shifter Module in the preacc control room that will delay the reset pulse to the sources by 1 msec if no beam is desired in the linac. Controlled by the prom module, safety system status, and vacuum valve status.

pulse shifter status module Module in the control room that shows the pulse shifter status and can reset a pulse overcount if one occurs.

pulse skip detector Module in the preacc control room that senses when one or more of the 1-gap phase reversals from the clock module is missing (should occur at 15 Hz) and sends a message to secondary #G so that it can post an alarm.

quadrupole triplet A series of three quadrupoles of alternating polarity that produce a net focusing of the beam in both planes. Typically the two outer elements of a triplet are wired in series.

ramp enable A permit sent to the NTF 58° magnet power supply telling it that it may ramp. The ramp enable comes from the NTF interlock module.

red-dot board One type of binary I/O board found in a linac secondary connected to OPTO22 devices to provide optical input and output to the secondary.

reference source Part of the monitor/control module in the Haefely control system that produces a command voltage for the power supply in response to computer commands or local input.

regulator/oscillator module Module in the Haefely control system that receives the digitized command and monitor voltages from the monitor/control module and uses them to generate a drive signal for the power amplifier. The regulator/oscillator also receives an input that represents the high-voltage transformer output and uses it for regulation.

reverse power The RF power from an amplifier that is reflected back by the load. The power not reflected back is the forward power. The sum of the two represent the total power of the amplifier. In RF station tuning, the reverse power between stages is always tuned for a minimum.

RF bucket That area in RF phase where particles oscillate about the synchronous phase angle. Particles in an RF bucket will normally remain in the bucket. Particles outside the bucket will not be accelerated.

RF cavity An electrically-resonant standing-wave cavity designed to impart energy to particles as they pass through a gap or number of gaps in the cavity by virtue of the electric field gradient across the gap(s).

RF defocusing Phenomenon caused by the curved fields in the gap between drift tubes and the changing electric field strength that results in radial defocusing of the beam as it is accelerated between drift tubes.

RF phase adjust module Module in the low-level RF system that adjusts the phase of the input RF from the master oscillator under the direction of the local secondary microcomputer. This adjustment controls the intertank phase.

roughing pump A rotating-vane pump used in the initial stage of vacuum pumpdown, good down to about 10^{-3} torr.

RSS Acronym for Radiation Safety System. Logic system for a particular enclosure that controls the primary and secondary critical devices for that area. Inputs to the RSS include the status of the gates leading to the enclosure, the emergency switches in the enclosure, and whether or not the enclosure has been secured.

scaler Hardwired device in the NTF control room that acts to terminate patient exposure in case the beamline μP fails to do so at the proper point. The scaler contains counters and timers not associated with the control system and inputs directly to the NTF interlock module.

SCR Acronym for Silicon Controlled Rectifier. Also called a thyristor. A semiconductor rectifier whose forward anode-cathode current is controlled by a signal applied to a third electrode. Widely used in power supplies throughout the laboratory.

SDLC Acronym for Synchronous Data Link Control. A data link communication protocol developed by IBM and used to control the serial data link (or SDLC link) that connects the primary and secondary microcomputers in the linac control system.

secondary microprocessor Also secondary microcomputer. One of seventeen computers distributed throughout the linac that control and monitor the functions of the linac. The secondaries converse on a serial data link under the control of the primary microcomputer.

septum A magnetic or electrostatic device used to deflect charged particles along one of two paths. Typically, a solid metal sheet or plane of wires separates a region with and electric or magnetic field from a region of no field. Beam entering the first region is deflected while beam entering the second region is not.

serial data link Also SDLC link. A fiber-optic data link that connects the primary and secondary microcomputers in the linac control system. Data is transmitted on a 1 MHz Manchester-encoded clock under SDLC protocol.

shunt impedance Technically, an impedance in parallel with an electrical circuit. In this application, the ratio of the square of the electric field strength on the axis of an RF cavity to the power dissipated per meter of length.

Smeds module Module in the MCR built by Jim Smedinghoff (Smeds) that allows computer enabling of 15 Hz beam for use by the linac steering program (L36).

space charge forces Divergent forces on a charged particle beam caused by nonzero net charge density, i.e.: mutual repulsion.

spark gap Electrodes found on the Haefely voltage multiplier and the accelerating column that will arc in the event of a voltage imbalance and thus prevent an arc from occurring in expensive/inaccessible components.

spectrometer A device for producing a spectrum. The 40° bending magnet in the momentum analysis line comprises a magnetic spectrometer. Particles with different momenta will follow different paths through the magnet and will appear in different positions at the scanning wire.

stem-box cover A cover over the tops of the drift-tube stems that protrude from the top of a linac RF cavity, which may be evacuated to prevent vacuum leaks around the stems.

synchronous particle A particle that is at the synchronous phase angle with respect to the accelerating RF.

synchronous phase angle That RF phase angle at which a particle will receive just enough energy in each cell to reach the next cell just as the RF goes through 360°.

system ready Sum of the second-level interlocks in the NTF interlock module. Two such sums ("A" and "B") are required to be present in order to make up the next level of interlocks.

tetrode A thermionic emission tube with four electrodes: cathode, anode, grid, and screen.

thyratron A gas-filled triode in which the voltage on the grid can trigger ionization of the gas in the tube. Once the gas is ionized, current flows from cathode to anode until the potential across the two falls below a certain level. Thyratrons are used as high-voltage relays in the chopper power supplies and in the RF modulators to trigger the ignitrons.

transmission line An electric line uniform in series resistance, series inductance, shunt inductance, and shunt capacitance. The transmission line from a PA to an RF cavity is coaxial in construction.

transport line A system of bending and focusing magnets used to transport beam from one area to another.

triode A thermionic emission tube with three electrodes: cathode, anode, and grid.

trombone A U-shaped device for adjusting the length of coaxial cables or transmission lines.

tuning slug Copper cylinders mounted in the wall of the RF cavities that may be moved in and out to adjust cavity tune. Specifically, one motorized slug in each tank under the control of the low-level RF system.

turbo cart Vacuum pumping stations found in the 200 MeV area, consisting of a combination of a roughing pump and a turbo (turbomolecular) pump. These stations are connected to the 200 MeV line vacuum through manually-operated valves.

turbo pump Turbomolecular vacuum pump. A pump containing spinning turbine disks used in the second stage of vacuum pumpdown, good down to about 10^{-9} torr. Ion pumps are used at operational pressures for the sake of economy and practicality.

water resistor Plastic tubes running from the preaccelerator pit wall along the column and to the dome, used to control the potential drop among the column electrodes. The resistance of the tubes are controlled by LCW flowing through them. This resistance also has an effect on the current drawn by the Haefely power supply.

waveform generator/sequencer Module in the modulator pulse-forming circuitry that generates RF system times in response to the RFON timing pulse. This module also forms the basic modulator waveform which is then passed to the amplitude control module.

work function The difference in energy of the Fermi level of a solid and the energy of free space outside the solid. In this application, the amount of energy required to liberate an electron from a metal surface.

REFERENCES

The list that follows by no means covers all the material written about the FNAL linac; much more can be discovered in conference papers, IEEE reports, journals, and books. Some references are not entirely up-to-date, as improvements to the linac are constantly being made (in particular the control system was changed in 1983). It takes a seasoned eye to separate the wheat from the chaff in these cases. Furthermore, some documents (noted at the end of this section) are totally obsolete and are best avoided entirely.

GENERAL INFORMATION

OPBULL 1046 — L. Allen, Your Basic Injector Gotchas
Compilation of many little-known facts about the linac, oriented toward operations.

PREACCELERATOR

OPBULL 486 — D. Kindelberger, Entering the Preaccelerator Dome Ignore steps E and F.

OPBULL 600 — J. Crisp, (no title) FNAL magnetron ion source. Parameters have changed with the introduction of the grooved cathode.

OPBULL 671 — C. Schmidt, H- Source Pressure Servo System
Control system channel numbers obsolete.

OPBULL 717 — R. Hren, Addition to Preaccelerator High Voltage Interlock System

OPBULL 917 — C.Schmidt, Correcting for Source Pressure Bursts Control system channel numbers obs.

OPBULL 953 — C. Schmidt, The H- Preaccelerator and Source Changes Introduction of grooved cathode.

C. Curtis — Ion Source and Injector Development
1976 Proton Linear Accelerator Conference.
Comparison of several types of ion sources.

C. Schmidt — A 50-mA Negative Hydrogen Ion Source, 1979 Particle Accelerator Conference, San Francisco. FNAL magnetron development.

C. Curtis, et al. Linac H- Beam Operation and Uses at Fermilab IEEE Transactions on Nuclear Science, 1979.

D. Howard — Description of Solid State Monitor/Regulator for Haefely 750 keV P.S., 1980.

750 keV TRANSPORT LINE

OPBULL 210 — C. Curtis, 750 keV Chopper Operation

OPBULL 577 — F. Cilyo, Preacc Sorenson Power Supplies Troubleshooting Flow charts and everything.

OPBULL 628 — L. Allen, Tuning 750 the keV Transport Line Old control system nomenclature. Try to get one with the chart on the back.

OPBULL 720 — J. Wendt, Preaccelerator Vacuum Interlock

FN 201 — C. Curtis, et al. The Operation of the First Section of the NAL Linear Accelerator Old control system nomenclature, but good reading.

EXP 111 — S. Ohnuma, The Beam Emittance... Discussion of beam emittance throughout the accelerator.

TIMING AND PULSE SHIFTER

OPBULL 561 — L. Wahl, Pulse Shifter General Information Some good information but largely obsolete.

OPBULL 663 — L. Allen, New H- Chopper Controls Prom module logic; some new inputs.

OPBULL 915 — M. Utes, Abort Logic/Pulse Shifter Interface This system is rapidly changing. Beware.

OPBULL 1058 — L. Allen, Linac 15 Hz Running and P-bar Beam Switches, Generation of P-bar enables. This is also changing.

OPBULL 1059 — L.Allen, NTF Switch vs TLG, Description of NTFP bit on ACNET page D69.

THE ALVAREZ STANDING-WAVE PROTON LINAC

TM 279 — S. Snowdon, Modified Phase Acceptance in Linacs Calculation of stable phase region.

TM 611 — S. Ohnuma, A Simple Program to Calculate the Alvarez-Type Linac Cavity
Simple for *him*, maybe.

L. Smith — Linear Accelerators, Instrumentelle Hilfsmittel der Kernphysik I, 1959.
Don't worry, it's in English. (Well, most of it anyway....)

Livingston & Blewett — Particle Accelerators, chapter 10
(John Crawford has a copy.)

G. Wheeler — RF Structures for Linear Accelerators, IEEE Transactions on Nuclear Science, 1965.
Discussion of drift-tube accelerators.

G. Wheeler — Progress in Proton Linear Accelerators, 1969
Comparison of BNL, NAL, LASL linacs.

P. Grand — The Physical Design of a 200-MeV Linac Facility, IEEE Transactions on Nuclear Science, 1967. Brookhaven linac.

The following six papers are from the 1970 Proton Linear Accelerator Conference at FNAL:

M. Palmer — The Alignment of Tanks and Drift Tubes for the NAL 200-MeV Linac Using a Laser Light Beam

D. Young, et al. — Construction and Initial Performance of the NAL 200-MeV Linear Accelerator
Written before 200 MeV beam was produced.

C. Owen, et al. — Experience with Post Coupler Stabilized Structures in the NAL Linac
Good discussion of post couplers.

M. Trump — Bead Perturbation Measurement
Method by which cavity fields are measured.

J. Aggus — Linac Tank Installation and Tune-Up for 200-MeV Linac Description of fabrication of tanks for the Brookhaven linac.

K. Halbach — Effect of Drift Tube Tolerances on the Electric Field Distribution Along the Length of an Alvarez Cavity Masochists only.

LINAC RF SYSTEMS

OPBULL 7 — D. Mendenhall, Linac RF Systems The virtues of turning on RF slowly.

OPBULL 75 — C. Owen, Linac Driver Minimum Forward Power Interlock

OPBULL 121 — C. Owen, (no title) PA filament regulator system. Old control system nomenclature.

OPBULL 288 — D. Mendenhall, 400 Watt Solid-State Power Amps First IPA.

OPBULL 596 — J. Lackey, Permanent Inhibits and Long Linac Downtimes, or How to Save a Gas Barrier More virtues of turning on RF slowly.

OPBULL 692 — L. Allen, PA Crowbar vs Permanent Inhibit

OPBULL 797 — L. Allen, Remote Control of Linac Gradients Ignore the second paragraph; the modules are different now.

OPBULL 1049 — R. Gerig, Linac Turn On: Turn Off Procedure Includes description of status lights.

OPBULL 1050 — J. Bauman, Tuning a Linac RF Station An ageless classic.

OPBULL 1054 — L. Allen, Linac Low-Level RF

OPBULL 1056 — L. Allen, Linac Modulators Y631s replaced by keyer; three toroids instead of two.

TM 94 — R. Featherstone, Coaxial Transmission Line for the NAL 200 MeV Linac Tests of several types of transmission lines.

L. Wahl — Waveform Generator/Sequencer Module, Amplitude Control Module, and Gradient Regulator, none yet published.

A. Donaldson — Modulator Reliability and Replacing Tetrodes With MOSFETS 1981 Proton Linear Accelerator Conference. Modulator keyer. (Haven't read this one, myself.)

C. Curtis, et al. Operating Experience with the NAL 200-MeV Linac 1972 Proton Linear Accelerator Conference. Emittance measurements and RF system reliability.

J. Leiss — Beam Loading in Linear Accelerators, IEEE Transactions on Nuclear Science, 1965.

M. Hoover — Grid-Cotrolled Power Tubes in Particle-Accelerator Applications, IEEE Transactions on Nuclear Science, 1965.

D. Mendenhall — The National Accelerator Laboratory Linear Accelerator Radio-Frequency System, 1970 Proton Linear Accelerator Conference.

BUNCHER

OPBULL 1055 — L. Allen, Linac Pulse Forming Network Old low-level RF system, still partially applicable to the buncher.

OPBULL 1057 — L. Allen, The Buncher and Beam Proper buncher tuning methods.

FN 277 — L. Teng, High-Efficiency Buncher System for Linac Actually a scheme for two parallel bunchers.

QUADRUPOLES

OPBULL 212 — C. Owen, Linac Operational Procedures Proper monitoring of linac quadrupoles.

OPBULL 779 — R. Benson, The Linac Quadrupole Power Supply System

OPBULL 780 — R. Benson, Timing In a Linac Quadrupole

R. Goodwin, et al. Pulsed Power Supplies for the NAL Linear Accelerator Quadrupole Magnets, 1970 Proton Linear Accelerator Conference

200 MeV AREA

OPBULL 397 — E. Gray, 200-MeV Transport Line Setup No more horizontal stacking at booster injection since negative-ion sources used.

OPBULL 718 — R. Webber, Checking the Linac Beam Momentum Old control system nomenclature.

FN 227 — S. Ohnuma, Momentum Spread of the 200 MeV Linac Beam at NAL Changing the momentum spread of the linac by varying the RF phase between the last two cavities.

TM 443 — C. Curtis, Variability of NAL Linac Energy Changing output momentum of the linac by varying RF phases.

E. Hubbard, et al. System for Transport and Analysis of 200 MeV Linac Beam, 1970 Proton Linear Accelerator Conference. Good description of 200 MeV line setup and diagnostics, but does not reflect experience with beam.

R. Goodwin, et al. Beam Diagnostics for the 200 MeV NAL Linac, 1970 Proton Linear Accelerator Conf. Descriptions of emittance probes and wire scanners.

VACUUM SYSTEMS

OPBULL 29	G. Ortlieb, Vacuum Interlock Between Linac and Booster Tank 9 vacuum valve interlock to 200 MeV area Penning gauge.
OPBULL 267	T. Larson, Power Failure in 200 MeV Vacuum System, Turbo Pumps Starting turbo carts.
OPBULL 416	J. Erickson, (no title) Vacuum valve controller interlocks.
OPBULL 513	W. Andrews, 200 MeV Vacuum System

WATER SYSTEMS

W. Andrews	Linac Water System General operation.
F. Kzirch	The Cooling System for the NAL 200-MeV Linac 1970 Proton Linear Accelerator Conference.

NEUTRON THERAPY FACILITY

OPBULL 400	D. Rohde, Cancer Therapy Supply C58 58° magnet vernier. Old control system nomenclature.
OPBULL 923	L. Allen, Suspending Linac Parameters Suspending inhibits on systems 4-9 without burning up the linac.
OPBULL 1047	L. Allen, Linac Monitoring The same as OPBULL 923.
TM 556	D. Johnson, Fermilab Medical Facility: Beam Transport Line NTF beam transport line.
TM 613	J. Gannon, CTF Beam Interlocks Wildly obsolete for the most part, some good info.

TM 834 — Awschalom & Rosenberg, Neutron Beam Calibration and Treatment Planning Long but very informative description of NTF facility; patient setup procedure.

TM 928 — Awschalom & Rosenberg, Conceptual Design of Beryllium Targets for the Generation of Neutron Beams for Radiation Therapy by the (p,n) Reaction Discussion of target design. Also one of the longest titles I've come across.

TM 993 — Awschalom, et al., The Fermilab Neutron Therapy Facility: Treatment Planning for Neutron and Mixed Beams Patient setup.

TM 1018 — Awschalom, et al., High Precision in Dose Delivery: Routine Use of a Microcomputer Calibration procedures.

FN 314 — L. Cohen, et al., Second Annual Progress Report: Fermilab Cancer Therapy Facility, Batavia, Illinois Some medical results of neutron therapy; not written for the layman.

FN 342 — L. Cohen, et al., Fast Neutron Radiation Therapy Mechanisms of tissue response to neutron beams.

M. Awschalom, et al., The Fermilab Neutron Radiotherapy Facility, IEEE Transactions on Nuclear Science, 1977.

CONTROL SYSTEM

TM 1238 — M. Shea, The Fermilab 200 MeV Linac Control System Hardware Long and thorough discussion of the new (1983) linac control system. Recommended reading.

HDWREL 3 — R. Florian, et al., A Serial Console for Linac Secondaries Description of local console hardware. Good if you want to build your own.

SFTREL 105 — R. Goodwin, Linac Analog Data Page Description of ACNET page L11, with that plot package no one can stand. Good insights into control system capabilities, however.

Goodwin & Shea — The Distributed Control System for the Fermilab 200 Mev Linac, 1984? Overview.

LINAC SAFETY

OPBULL 282 — J. Erickson, (no title) Radiation warning lamps in linac.

OPBULL 314 — R. Parry, Critical Device Failure Mode Module Control of beam stop and pulse shifter.

OPBULL 396 — R. Parry, Linac Radiation Safety System #3 no longer applicable. Search and secure procedure. Only OPBULL containing the word "ameliorated".

OPBULL 399 — R. Parry, CTF Radiation Safety System Not operations group responsibility.

OPBULL 404 — G. Urban, Linac Accesses Turning down RF gradients for accesses to linac.

OPBULL 425 — S. Baker, Cancer Therapy Facility Radiation Safety Radiation levels in lower linac gallery during patient treatment.

OPBULL 694 — R. Parry, Everything You Wanted to Know, and Need to Know, About the Linac 750 keV Beam Stop and Gate Valve Beam stop interlocks. Pressure and vacuum valve interlocks are no more.

OPBULL 721 — R. Parry, Changes and/or Additions to the Safety System New beam stop interlocks.

OPBULL 1048 — R. Parry, Linac Penetration Interlock

EXP 90 — C. Curtis, Accelerator Experiment: Preaccelerator Radiation Survey Radiation levels outside of accelerating column.

M. Awschalom — Radiation Shielding and Safety Considerations for the NAL 200 MeV Linac 1970 Proton Linear Accelerator Conference. Calculations of radiation levels in and about the linac, done before the facility was finished. Walls not solid concrete.

The following documents are obsolete and are not suitable for informative purposes:

OPBULL 276
OPBULL 324
OPBULL 525
OPBULL 527
OPBULL 643
OPBULL 646
OPBULL 688
OPBULL 782
OPBULL 805
TM 309
SFTREL 65
SFTREL 67
SFTREL 99

The FNAL 200 MeV Linac

LIST OF SCHEMATICS

All numbers are FNAL drawing numbers unless otherwise noted. Copies of all microfilmed FNAL drawings are available from the duplicating department in the basement of the central laboratory.

PREACCELERATOR

0211-ME-3288	Haefely power supply and preaccelerator dome
0211-ME-60008	Haefely power supply and preaccelerator dome
0212-EB-60602	Haefely power amplifier
0212-EB-60603	voltage divider (Haefely monitor circuit)
0212-ED-60599	monitor/control module
0212-ED-60600	regulator/oscillator module
0211-ME-60469	source assembly
0211.MD-60266	accelerating column electrode

Haefely 0-525-65 Haefely bouncer circuit

750 keV TRANSPORT LINE

0210-EC-60481	chopper power supply
0211.ME-60519	chopper electrodes

TIMIMG AND PULSE SHIFTER

0212-EE-60192	keyswitch module
0212-ED-60201	pulse shifter
0212-ED-60215	pulse shifter doghouse wiring
0212-EC-60307	pulse shifter buffer
0214-ED-60493	prom module, first prom
0214-ED-60494	prom module, second prom

THE ALVAREZ STANDING-WAVE PROTON LINAC

0271.ME-3141	tank 1 external view
0272.ME-3885	post coupler
0272.MC-4541	post coupler
0272.MD-4581	tuning slug

LINAC RF SYSTEMS

0230.ME-4103	RF system overhead view
0230.ME-4095	9-3/16" transmission line plan view
0275.ME-4905	gas barrier and RF drive loop
0272-MD-4027	RF drive loop
0275.MC-3882	RF pickup loop

QUADRUPOLES

0201.MC-3173	drift tube assembly
0272.MC-3018	drift tube #1 (end wall of tank)
0201.ME-3174	drift tube alignment fixture
0272.MD-4410	stem-box cover

200 MeV AREA

0310-ME-19427,28,29,30	200 Mev line components (5 sheets)
0310-MC-19634	component listing for above
031--ME-19644	200 MeV area

WATER SYSTEMS

0230-MD-4058	preaccelerator water system
0230.MC-4626	preaccelerator water flow diagram
0230.MD-4132	RF water system temperature control
0261-MD-3918	identical to 0230.MD-4132 (had to happen)
0230.MC-3874	RF water system control, A7 rack
0230-MD-4627	RF water flow diagram
0261-MD-3919	cavity water system temperature control
0230-MC-4626	cavity water flow diagram