Fermi National Accelerator Laboratory

FERMILAB-TM-2078

Theory of the Autozero Box and the Transverse Tune Measurement System of the Tevatron

Cheng-Yang Tan

Fermi National Accelerator Laboratory
P.O. Box 500, Batavia, Illinois 60510

April 1999

Operated by Universities Research Association Inc. under Contract No. DE-AC02-76CH03000 with the United States Department of Energy

Disclaimer

This report was prepared as an account of work sponsored by an agency of the United States Government. Neither the United States Government nor any agency thereof, nor any of their employees, makes any warranty, expressed or implied, or assumes any legal liability or responsibility for the accuracy, completeness, or usefulness of any information, apparatus, product, or process disclosed, or represents that its use would not infringe privately owned rights. Reference herein to any specific commercial product, process, or service by trade name, trademark, manufacturer, or otherwise, does not necessarily constitute or imply its endorsement, recommendation, or favoring by the United States Government or any agency thereof. The views and opinions of authors expressed herein do not necessarily state or reflect those of the United States Government or any agency thereof.

Distribution

Approved for public release; further dissemination unlimited.

Copyright Notification

This manuscript has been authored by Universities Research Association, Inc. under contract No. DE-AC02-76CHO3000 with the U.S. Department of Energy. The United States Government and the publisher, by accepting the article for publication, acknowledges that the United States Government retains a nonexclusive, paid-up, irrevocable, worldwide license to publish or reproduce the published form of this manuscript, or allow others to do so, for United States Government Purposes.

Theory of the Autozero Box and the Transverse Tune Measurement System of the Tevatron

Cheng-Yang Tan

Beams Division/Tevatron

ABSTRACT: This paper is divided into two major parts: the theory of how the autozero box is used to suppress the revolution lines and the theory of how the transverse tune is measured. We will show that the autozero box will be unable to suppress all the revolution lines if there are relative phase errors between the plates of the stripline pickup and these unsuppressed lines will determine the minimum dynamic range needed for tune measurement. For tune measurement, we will show that the theoretical size of the tune line for a 1 V potential difference across the kickers would require a 16-bit analogue to digital converter.

PART I

The following pages will present the calculations for understanding the workings of the autozero box. We will show that we cannot suppress all the revolution lines if there are relative phase errors between the plates in the pickups. The size of the unsuppressed revolution lines will strongly determine the dynamic range needed for measuring the tune in the machine.

AUTO-ZERO

The auto-zero box is designed to suppress the revolution lines in the spectrum of the mixed down difference signal. These revolution lines arise because the closed orbit of the bunch does not necessarily go through the centre of the pickup. However, we will show that the suppression of all the revolution lines is not possible if the pickup has impedance errors from construction. The autozero box schematic is shown in Figure 1

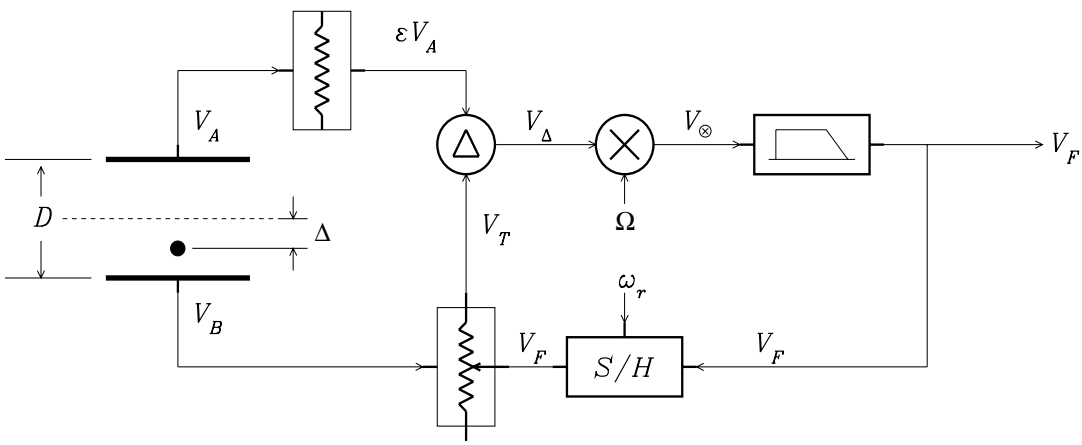

Figure 1 This is the schematic used to calculate V_F. The errors in the pickup plates are discussed in *Pickups*.

Let us make the following assumptions with regard to the auto-zero box:

(i) The pickup plates have a impedance mismatch which will be discussed in the section *Pickups*.

(ii) The frequency of the closed orbit transverse motion is within the bandwidth of the autozero box. In practice this motion must be $\ll 1$ Hz.

Let us first assume that the bunch is a δ-function, then the bunch at the pickup can be described by

$$I_b(z,t) = a \sum_{n=-\infty}^{\infty} \delta\left(t - \frac{z}{c} - nT\right) \tag{1}$$

where $a = \alpha N q$, and $T = 2\pi/\omega_r$ is the revolution period of the bunch. (The α factor in a is explained in *Enhancement*.) Then in Fourier space

$$\begin{aligned} \tilde{I}_b(z,\omega) &= a \sum_{n=-\infty}^{\infty} e^{i\omega(nT+z/c)} \\ &= a\omega_r e^{i\omega z/c} \sum_{n=-\infty}^{\infty} \delta(\omega - n\omega_r) \end{aligned} \tag{2}$$

where we have defined the Fourier transform as

$$\tilde{f}(\omega) = \int_{-\infty}^{\infty} dt\ f(t) e^{i\omega t} \tag{3}$$

The currents induced on the pickup plates A and B due to I_b are

$$\left.\begin{aligned} \tilde{I}_A(z,\omega) &= \frac{\tilde{I}_b(z,\omega)}{2}\left(1 - \frac{2\Delta}{D}\right) \\ \tilde{I}_B(z,\omega) &= \frac{\tilde{I}_b(z,\omega)}{2}\left(1 + \frac{2\Delta}{D}\right) \end{aligned}\right\} \tag{4}$$

for a bunch displacement of Δ. See Figure 1.

Enhancement

There is an enhancement factor α which takes into account the fact that the bunch is not spread out throughout the machine but is in a finite bucket. We suppose that the length of the sampling gate $\tau_g > \tau_{\text{bunch}}$ and $\tau_g \ll \langle T_r \rangle$ where τ_g is the length of the gate, τ_{bunch} is the time spread of the bunch, and $\langle T_r \rangle$ is the mean revolution period of the bunch. Therefore,

$$\alpha = \langle T_r \rangle / \tau_{\text{bunch}} \tag{5}$$

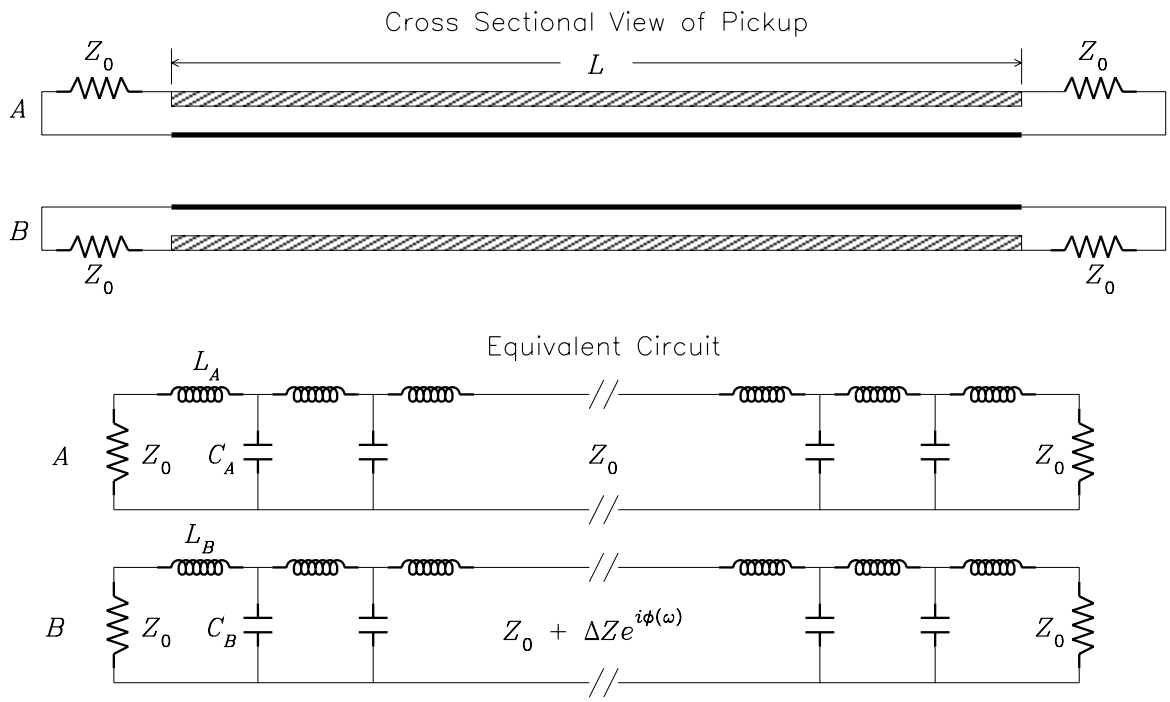

Figure 2 The equivalent circuit is shown here. The two striplines in the pickup are modelled as two transmission lines. Stripline A is assumed to be perfectly matched, while stripline B has an error of $\Delta Z e^{i\phi(\omega)}$ in its characteristic impedance.

PICKUPS

We will model each stripline in the pickup as a transmission line. See Figure 2. Let us suppose that the two pickup plates A and B are not identical with A having a characteristic impedance of Z_0 and perfectly terminated with Z_0. B is identically terminated with Z_0, but its characteristic impedance is $Z_0 + \Delta Z e^{i\phi(\omega)}$ with $\Delta Z/Z_0 \ll 1$ and $\phi(\omega)$ is some phase error which is a function of ω. For the purposes of this paper, we will assume that $Z_0, \Delta Z \in \mathbb{R}$. Let us suppose that $\phi(\omega)$ is analytic and therefore can be written as

$$\phi(\omega) = a_0 + a_1\omega + a_2\omega^2 + \dots \tag{6}$$

We will suppose that at d.c. there is no phase error, therefore $a_0 \equiv 0$. We will make also

the simplifying assumption that non-linear terms in ω are also zero, so that

$$\phi(\omega) = a_1\omega \tag{7}$$

We can always reparametrize a_1, so that it looks like time i.e. $a_1 \to \ell/c$, therefore the characteristic impedance of stripline B is $Z_0 + \Delta Z e^{i\omega\ell/c}$.

Thus with the above conditions, we find that the voltages $\tilde{V}_A$ and $\tilde{V}_B$ induced by a bunch at $z = 0$, are

$$\left.\begin{aligned}
\tilde{V}_A(\omega) &= \frac{Z_0}{2}\left(\tilde{I}_A(\omega,0) - e^{i\omega L/c}\tilde{I}_A(\omega,L)\right) \\
\tilde{V}_B(\omega) &= \left[\frac{Z_0}{2}\left(1 + \frac{\Delta Z e^{i\omega\ell/c}}{2Z_0}\right) - \frac{\Delta Z e^{i\omega\ell/c}}{4}e^{i2\omega L/c}\right]\tilde{I}_B(\omega,0) - \frac{Z_0}{2}e^{i\omega L/c}\tilde{I}_B(\omega,L)
\end{aligned}\right\} \tag{8}$$

See Appendix A for the derivation of (8).

Let us interpret what (8) is by setting $\Delta = 0$ after transforming it back to the time domain

$$\left.\begin{aligned}
V_A(t) &= \frac{aZ_0}{4}\sum_{n=-\infty}^{\infty}\delta(t-nT) - \delta\left(t - \frac{2L}{c} - nT\right) \\
V_B(t) &= \frac{aZ_0}{4}\sum_{n=-\infty}^{\infty}\delta(t-nT) - \delta\left(t - \frac{2L}{c} - nT\right) + \\
&\qquad \frac{a\Delta Z}{8}\sum_{n=-\infty}^{\infty}\delta\left(t - \frac{\ell}{c} - nT\right) - \delta\left(t - \frac{(2L+\ell)}{c} - nT\right)
\end{aligned}\right\} \tag{9}$$

The first sum in (9) of V_B is the usual doublet as in V_A. The second sum shows that there are two more reflections coming at $t = \ell/c$ and $t = (2L+\ell)/c$. This means that even if we have an ideal autozero box, $(V_A - V_B)$ can never be zero if we have phase errors.

Let us consider the case when $\ell = 0$, then (9) becomes

$$\left.\begin{aligned}
V_A(t) &= \frac{aZ_0}{4}\sum_{n=-\infty}^{\infty}\delta(t-nT) - \delta\left(t - \frac{2L}{c} - nT\right) \\
V_B(t) &= \frac{aZ_0}{4}\left(1 + \frac{\Delta Z}{2Z_0}\right)\sum_{n=-\infty}^{\infty}\delta(t-nT) - \delta\left(t - \frac{2L}{c} - nT\right)
\end{aligned}\right\} \tag{10}$$

which means that to first order in $\Delta Z/Z_0$, the magnitude of V_B is increased by a factor of $(1 + \Delta Z/2Z_0)$ than when $\Delta Z = 0$. Thus this type of error is just a simple shift in the electrical centre of the pickup. Therefore, we would expect that if the impedance error in the stripline is small, and $\ell = 0$, this sort of stripline error would not prevent the autozero box from removing the revolution lines completely.

FEEDBACK

The feedback process in the autozero circuit starts with $\tilde{V}_A$ and $\tilde{V}_B$. The objective is to get $\tilde{V}_\Delta$ to zero by setting the level of the attenuator with $\tilde{V}_F$. $\tilde{V}_F$ is also the output voltage that is used for tune measurement.

Substituting (4) into (8), we have

$$\left.\begin{aligned}
\tilde{V}_A(\omega) &= -i\frac{aZ_0}{2}\left(1-\frac{2\Delta}{D}\right)\omega_r e^{i\omega L/c}\sin\frac{\omega L}{c}\sum_{n=-\infty}^{\infty}\delta(\omega-n\omega_r) \\
\tilde{V}_B(\omega) &= -i\frac{a}{2}\left(Z_0+\frac{\Delta Z e^{i\omega\ell/c}}{2}\right)\left(1+\frac{2\Delta}{D}\right)\omega_r e^{i\omega L/c}\sin\frac{\omega L}{c}\sum_{n=-\infty}^{\infty}\delta(\omega-n\omega_r)
\end{aligned}\right\} \tag{11}$$

Let us suppose that the revolution frequencies in the bunch are distributed as $\rho(\omega_r)$ then $\tilde{V}_A$ and $\tilde{V}_B$ are simply modified by integrating over ρ, i.e.

$$\left.\begin{aligned}
\tilde{V}_A(\omega) &= -i\frac{aZ_0}{2}\left(1-\frac{2\Delta}{D}\right)e^{i\omega L/c}\sin\frac{\omega L}{c}\sum_{n=-\infty}^{\infty}\int_{-\infty}^{\infty}\rho(\omega_r)\delta(\omega-n\omega_r)\omega_r\,d\omega_r \\
&= -i\frac{aZ_0}{2}\left(1-\frac{2\Delta}{D}\right)e^{i\omega L/c}\sin\frac{\omega L}{c}\sum_{n=-\infty}^{\infty}\rho(\omega/n)\frac{\omega}{n} \\
\tilde{V}_B(\omega) &= -i\frac{a}{2}\left(Z_0+\frac{\Delta Z e^{i\omega\ell/c}}{2}\right)\left(1+\frac{2\Delta}{D}\right)e^{i\omega L/c}\sin\frac{\omega L}{c}\times \\
&\qquad\sum_{n=-\infty}^{\infty}\int_{-\infty}^{\infty}\rho(\omega_r)\delta(\omega-n\omega_r)\omega_r\,d\omega_r \\
&= -i\frac{a}{2}\left(Z_0+\frac{\Delta Z e^{i\omega\ell/c}}{2}\right)\left(1+\frac{2\Delta}{D}\right)e^{i\omega L/c}\sin\frac{\omega L}{c}\sum_{n=-\infty}^{\infty}\rho(\omega/n)\frac{\omega}{n}
\end{aligned}\right\} \tag{12}$$

which are a series of lines centred around $n\omega_r$ in the frequency domain.

Looking at Figure 1, we see that

$$\left.\begin{aligned}
\tilde{V}_\Delta(\omega) &= \varepsilon\tilde{V}_A(\omega)-\tilde{V}_T(\omega) \\
&= \varepsilon\tilde{V}_A(\omega)-\tilde{V}_B(\omega)10^{-k\tilde{V}_F(0)/20}
\end{aligned}\right\} \tag{13}$$

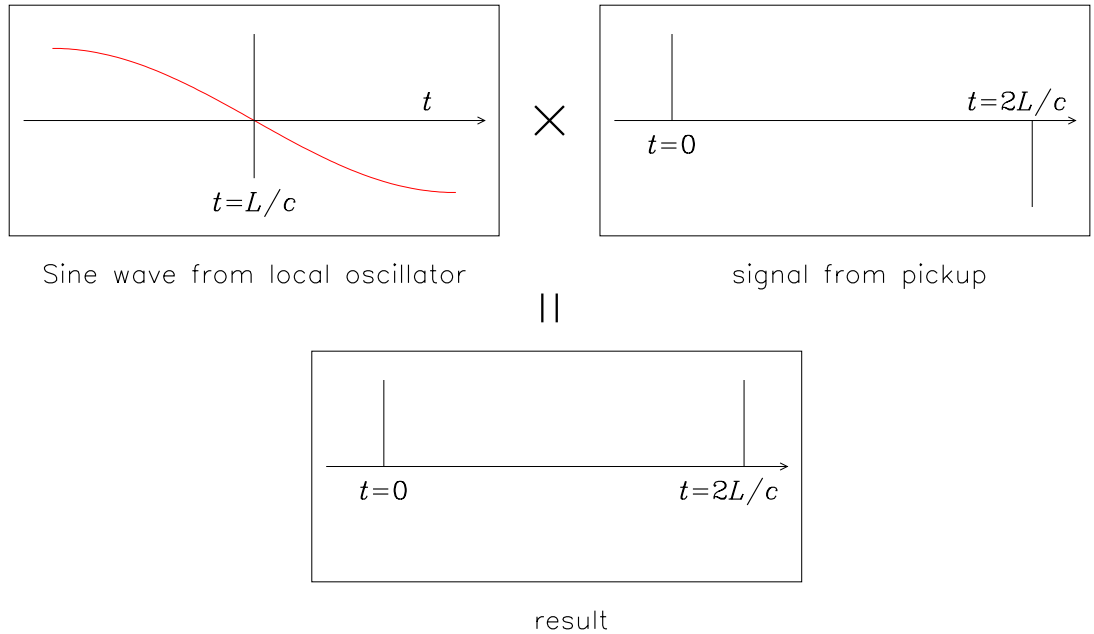

Figure 3 The phase of the local oscillator is chosen such that the zero of the sine wave crosses at $t = L/c$.

where $\tilde{V}_A \to \varepsilon \tilde{V}_A$ after going through the attenuator and k is the gain of the variable attenuator. Note that $\tilde{V}_F(0)$ is correct in (13) and will be explained later. See Appendix B for the derivaton of the attenuation factor $10^{-k\tilde{V}_F/20}$.

Next $\tilde{V}_\Delta$ goes through a mixer with local oscillator frequency $\Omega = M\omega_r$ where M is a large positive number. In t-space, the result of going through the mixer is

$$V_\otimes(t) = V_\Delta(t)\sin(\Omega t + \phi) \tag{14}$$

where ϕ is the arbitrary phase chosen such that the sine function crosses the mid-point of the pickup signal for a δ-function bunch. See Figure 3. It is easy to show that $\phi = \pi - \Omega L/c$, therefore

$$\begin{aligned} V_\otimes(t) &= V_\Delta(t)\sin(\Omega t + \pi - \Omega L/c) \\ &= -V_\Delta(t)\sin(\Omega t - \Omega L/c) \end{aligned} \tag{15}$$

Fourier transforming the above (See Appendix D for derivation), we have

$$\tilde{V}_{\otimes}(\omega) = -\frac{1}{2i}\left[e^{-i\Omega L/c}\tilde{V}_{\Delta}(\omega+\Omega) - e^{i\Omega L/c}\tilde{V}_{\Delta}(\omega-\Omega)\right] \tag{16}$$

Then $\tilde{V}_{\otimes}$ goes through a low-pass filter which has the usual transfer function

$$\tilde{H}_F(\omega) = \frac{1}{\sqrt{1+\frac{\omega^2}{\omega_F^2}}} \tag{17}$$

where ω_F is the 3dB point which we choose to be $2\omega_r$, thus (17) becomes

$$\tilde{H}_F(\omega) = \frac{1}{\sqrt{1+\frac{\omega^2}{4\omega_r^2}}} \tag{18}$$

Finally, the output $\tilde{V}_F$ is

$$\tilde{V}_F(\omega) = -\frac{1}{2i\sqrt{1+\frac{\omega^2}{4\omega_r^2}}}\left[e^{-i\Omega L/c}\tilde{V}_{\Delta}(\omega+\Omega) - e^{i\Omega L/c}\tilde{V}_{\Delta}(\omega-\Omega)\right] \tag{19}$$

Notice that because of the filter, there are only two lines of interest in $\tilde{V}_F$ which are at $\omega = 0$ and $\omega = \omega_r$.

Next, $\tilde{V}_F$ goes through the sample and hold circuit which is sampling at ω_r. This means that the $\tilde{V}_F(\omega_r)$ line gets folded on top of the $\tilde{V}_F(0)$ line, i.e. the input voltage to the variable attenuator is at d.c. We will choose to use $\tilde{V}_F(0)$ to set the level of attenuation rather than $\tilde{V}_F(0) + \tilde{V}_F(\omega)$ because the strength of each line is not independent of each other. We will further show that if there are no phase errors, $\tilde{V}_F(\omega)$ will vanish as well as $\tilde{V}_F(0)$ when the variable attenuator is set this way. Therefore, when we look at $\tilde{V}_F(0)$, we have

$$\begin{aligned}
\tilde{V}_F(0) &= -\frac{1}{2i}\left[e^{-i\Omega L/c}\tilde{V}_{\Delta}(\Omega) - e^{i\Omega L/c}\tilde{V}_{\Delta}(-\Omega)\right] \\
&= -\frac{1}{2i}\left[\varepsilon\left(e^{-i\Omega L/c}\tilde{V}_A(\Omega) - e^{i\Omega L/c}\tilde{V}_A(-\Omega)\right) + \right. \\
&\qquad \left. 10^{-k\tilde{V}_F(0)/20}\left(e^{i\Omega L/c}\tilde{V}_B(-\Omega) - e^{-i\Omega L/c}\tilde{V}_B(\Omega)\right)\right] \\
&= \frac{aZ_0}{2}\sin\frac{\Omega L}{c}R(\Omega)\left[\varepsilon\left(1-\frac{2\Delta}{D}\right) - 10^{-k\tilde{V}_F(0)/20}\left(1+\frac{\Delta Z}{2Z_0}\cos\frac{\Omega\ell}{c}\right)\left(1+\frac{2\Delta}{D}\right)\right]
\end{aligned} \tag{20}$$

where

$$R(\omega) = \sum_{n=-\infty}^{\infty} \rho(\omega/n)\omega/n \tag{21}$$

and observed that $R(\omega) = R(-\omega)$ and that $R(\omega)$ is also dimensionless.

To solve for $\tilde{V}_F(0)$ in (20), we will make a substitution for the gain of the attenuator k and $10^{-k\tilde{V}_F(0)/20}$

$$\begin{aligned} k &= \frac{1}{\kappa} && \text{so that } \kappa \to 0 \text{ as } k \to \infty. \\ 10^{-k\tilde{V}_F(0)/20} &= e^{-\bar{\alpha}k\tilde{V}_F(0)} && \text{where } \bar{\alpha} = \tfrac{1}{20}\log 10 \end{aligned} \tag{22}$$

Therefore, (20) can be expanded as

$$\begin{aligned} \tilde{V}_F(0,\kappa) = \frac{aZ_0}{2}\sin\frac{\Omega L}{c}R(\Omega)\Bigg[\varepsilon\left(1-\frac{2\Delta}{D}\right) - \left(1+\frac{\Delta Z}{2Z_0}\cos\frac{\Omega\ell}{c}\right)\left(1+\frac{2\Delta}{D}\right)\times \\ \left(1-\frac{\bar{\alpha}}{\kappa}\tilde{V}_F(0,\kappa)+\frac{\bar{\alpha}^2}{2!\kappa^2}\tilde{V}_F(0,\kappa)^2-\dots\right)\Bigg] \end{aligned} \tag{23}$$

where we have explicitly put in the κ dependence in $\tilde{V}_F$. Next, let us assume that $\tilde{V}_F(0,\kappa)$ is finite as $\kappa \to 0$ and therefore has the following series expansion in κ

$$\tilde{V}_F(0,\kappa) = \sum_{n=0}^{\infty} a_n\kappa^n \tag{24}$$

Substituting (24) into (23) gives us

$$\begin{aligned} \sum_{n=0}^{\infty} a_n\kappa^n = \frac{aZ_0}{2}\sin\frac{\Omega L}{c}R(\Omega)\Bigg[\varepsilon\left(1-\frac{2\Delta}{D}\right) - \left(1+\frac{\Delta Z}{2Z_0}\cos\frac{\Omega\ell}{c}\right)\left(1+\frac{2\Delta}{D}\right)\times \\ \left(1-\frac{\bar{\alpha}}{\kappa}\sum_{n=0}^{\infty}a_n\kappa^n+\frac{\bar{\alpha}^2}{2!\kappa^2}\left(\sum_{n=0}^{\infty}a_n\kappa^n\right)^2-\dots\right)\Bigg] \end{aligned} \tag{25}$$

If κ is small, we can expand (25) to O(κ) to give

$$\begin{aligned} a_0 = \frac{aZ_0}{2}\sin\frac{\Omega L}{c}R(\Omega)\Bigg[\varepsilon\left(1-\frac{2\Delta}{D}\right) - \left(1+\frac{\Delta Z}{2Z_0}\cos\frac{\Omega\ell}{c}\right)\left(1+\frac{2\Delta}{D}\right)\times \\ \left(1-\bar{\alpha}\left(\frac{a_0}{\kappa}+a_1\right)+\frac{\bar{\alpha}^2}{2!}\left(\frac{a_0}{\kappa}+a_1\right)^2-\dots\right)\Bigg] \end{aligned} \tag{26}$$

Then if we demand that (26) remains finite as $\kappa \to 0$, we must have $a_0 \equiv 0$ which follows that a_1 is found by solving

$$\begin{aligned} 0 &= \varepsilon\left(1-\frac{2\Delta}{D}\right) - \left(1+\frac{\Delta Z}{2Z_0}\cos\frac{\Omega\ell}{c}\right)\left(1+\frac{2\Delta}{D}\right)\left(1-\bar{\alpha}a_1+\frac{(\bar{\alpha}a_1)^2}{2!}-\frac{(\bar{\alpha}a_1)^3}{3!}+\dots\right) \\ &= \varepsilon\left(1-\frac{2\Delta}{D}\right) - \left(1+\frac{\Delta Z}{2Z_0}\cos\frac{\Omega\ell}{c}\right)\left(1+\frac{2\Delta}{D}\right)e^{-\bar{\alpha}a_1} \\ \Rightarrow \quad a_1 &= \frac{1}{\bar{\alpha}}\log\left[\frac{\left(1+\frac{\Delta Z}{2Z_0}\cos\frac{\Omega\ell}{c}\right)\left(1+\frac{2\Delta}{D}\right)}{\varepsilon\left(1-\frac{2\Delta}{D}\right)}\right] \end{aligned} \tag{27}$$

Therefore

$$\tilde{V}_F(0,k) = \frac{20}{k}\log_{10}\left[\frac{\left(1+\frac{\Delta Z}{2Z_0}\cos\frac{\Omega\ell}{c}\right)\left(1+\frac{2\Delta}{D}\right)}{\varepsilon\left(1-\frac{2\Delta}{D}\right)}\right] \qquad \text{for } k \gg 1 \tag{28}$$

That (28) is correct can be easily checked. See Appendix C. Notice also that as the gain $k \to \infty$, $\tilde{V}_F(0) \to 0$ as required.

Now that we know how $\tilde{V}_F(0)$ looks like, we can calculate the strength of the $\tilde{V}_F(\omega_r)$ line. From (19) we have

$$\begin{aligned} \tilde{V}_F(\omega_r) &= -\frac{1}{i\sqrt{5}}\left[e^{-i\Omega L/c}\tilde{V}_\Delta(\omega_r+\Omega) - e^{i\Omega L/c}\tilde{V}_\Delta(\omega_r-\Omega)\right] \\ &= -\frac{\varepsilon}{i\sqrt{5}}\left[e^{-i\Omega L/c}\left(\tilde{V}_A(\omega_r+\Omega) - \frac{\tilde{V}_B(\omega_r+\Omega)\left(1-\frac{2\Delta}{D}\right)}{\left(1+\frac{\Delta Z}{2Z_0}\cos\frac{\Omega\ell}{c}\right)\left(1+\frac{2\Delta}{D}\right)}\right) - \right. \\ &\qquad \left. e^{i\Omega L/c}\left(\tilde{V}_A(\omega_r-\Omega) - \frac{\tilde{V}_B(\omega_r-\Omega)\left(1-\frac{2\Delta}{D}\right)}{\left(1+\frac{\Delta Z}{2Z_0}\cos\frac{\Omega\ell}{c}\right)\left(1+\frac{2\Delta}{D}\right)}\right)\right] \end{aligned} \tag{29}$$

which can be expanded to

$$\begin{aligned} \tilde{V}_F(\omega_r) &= \frac{aZ_0}{2\sqrt{5}}e^{i\omega_r L/c}R(\Omega)\varepsilon\left(1-\frac{2\Delta}{D}\right)\left[2\sin\frac{\Omega L}{c}\cos\frac{\omega_r L}{c} - \right. \\ &\qquad \left. \frac{2\sin\frac{\Omega L}{c}\cos\frac{\omega_r L}{c} + \frac{\Delta Z}{2Z_0}\left(e^{i(\omega_r+\Omega)\ell/c}\sin\frac{(\omega_r+\Omega)L}{c} - e^{i(\omega_r-\Omega)\ell/c}\sin\frac{(\omega_r-\Omega)L}{c}\right)}{1+\frac{\Delta Z}{2Z_0}\cos\frac{\Omega\ell}{c}}\right] \\ &\approx \frac{a\Delta Z}{4\sqrt{5}}e^{i\omega_r L/c}R(\Omega)\varepsilon\left(1-\frac{2\Delta}{D}\right)\left[2\sin\frac{\Omega L}{c}\cos\frac{\omega_r L}{c} - \right. \\ &\qquad \left. \left(e^{i(\omega_r+\Omega)\ell/c}\sin\frac{(\omega_r+\Omega)L}{c} - e^{i(\omega_r-\Omega)\ell/c}\sin\frac{(\omega_r-\Omega)L}{c}\right)\right] \end{aligned} \tag{30}$$

where we have made the approximation that $R(\omega_r \pm \Omega) \approx R(\Omega)$ and $(\Delta Z/Z_0)^2 \approx 0$. It is important to notice that unlike $\tilde{V}_F(0)$, $\tilde{V}_F(\omega_r)$ is independent of the gain of the amplifier k. Its existence and strength depends on both the value of ℓ and $\Delta Z/Z_0$. It can be easily checked that when either $\Delta Z = 0$ or when $\ell = 0$, (30) vanishes as required.

We can normalize (30) by the bunch current† $\alpha N q R(\Omega)$, impedance Z_0 and the fixed attenuation ε to obtain a dimensionless quantity independent of the shape of the bunch, $\tilde{v}_F(\omega_r)$ when $\Delta = 0$

$$\left.\begin{aligned}\tilde{v}_F(\omega_r) &= \frac{\tilde{V}_F(\omega_r)}{\alpha N q Z_0 R(\Omega)\varepsilon} \\ &= \frac{1}{8\sqrt{5}}\left(\frac{\Delta Z}{Z_0}\right) e^{i\omega_r L/c}\left[2\sin\frac{\Omega L}{c}\cos\frac{\omega_r L}{c} - \right. \\ &\qquad \left.\left(e^{i(\omega_r+\Omega)\ell/c}\sin\frac{(\omega_r+\Omega)L}{c} - e^{i(\omega_r-\Omega)\ell/c}\sin\frac{(\omega_r-\Omega)L}{c}\right)\right]\end{aligned}\right\} \tag{31}$$

which has a maximum value of

$$\tilde{v}_F^{\max}(\omega_r) = \frac{1}{2\sqrt{5}}\left(\frac{\Delta Z}{Z_0}\right) \tag{32}$$

† In Fourier space, current has dimensions of charge.

SPECIAL CASE

Let us consider the special case of a parabolic distribution

$$\rho(\omega) = \begin{cases} -\dfrac{6(\omega-\omega_1)(\omega-\omega_2)}{(\omega_2-\omega_1)^3} & \text{for } \omega_1 < \omega < \omega_2 \\ 0 \qquad \text{otherwise} & \end{cases} \tag{33}$$

Then

$$R(\Omega) \approx \omega_r \sum_{n=-m_1}^{m_2} \rho\left(\frac{M\omega_r}{M+n}\right) \qquad \text{for } M \gg 1 \tag{34}$$

where $M\omega_r/(M-m_1)$ is just below ω_2 and $M\omega_r/(M+m_2)$ is just above ω_1.

With the above distribution, and using the following numerical values,

$$\left.\begin{aligned} \omega_r &= 2\pi \times (47 \times 10^3 \text{ Hz}) & \alpha &= 21 \times 10^{-6}/10^{-9} \\ \Omega &= 1127 \times \omega_r & Z_0 &= 50\Omega \\ (\omega_2 - \omega_1) &= 4\pi & \Delta Z/Z_0 &= 0.1 \\ \Delta &= 0 & N &= 10^{11} \\ L &= 0.5 \text{ m} & R(\Omega) &= \frac{3\omega_r}{2(\omega_2-\omega_1)} = \frac{3}{8\pi}\omega_r \\ \varepsilon &= -10 \text{ dB} & & \end{aligned}\right\} \tag{35}$$

we can plot $\tilde{V}_F(\omega_r)$ as a function of $\Omega\ell/c$ which is shown in Figure 4. Although the values of $\tilde{V}_F(\omega_r)$ and $\tilde{v}_F(\omega_r)$ are small for $0 < \Omega\ell/c < 2\pi$, they are in fact growing and the upper bounds are $|\tilde{V}_F(\omega_r)| < 12.5$ dBV or 4.2 V and $|\tilde{v}_F(\omega_r)| < -33$ dB.

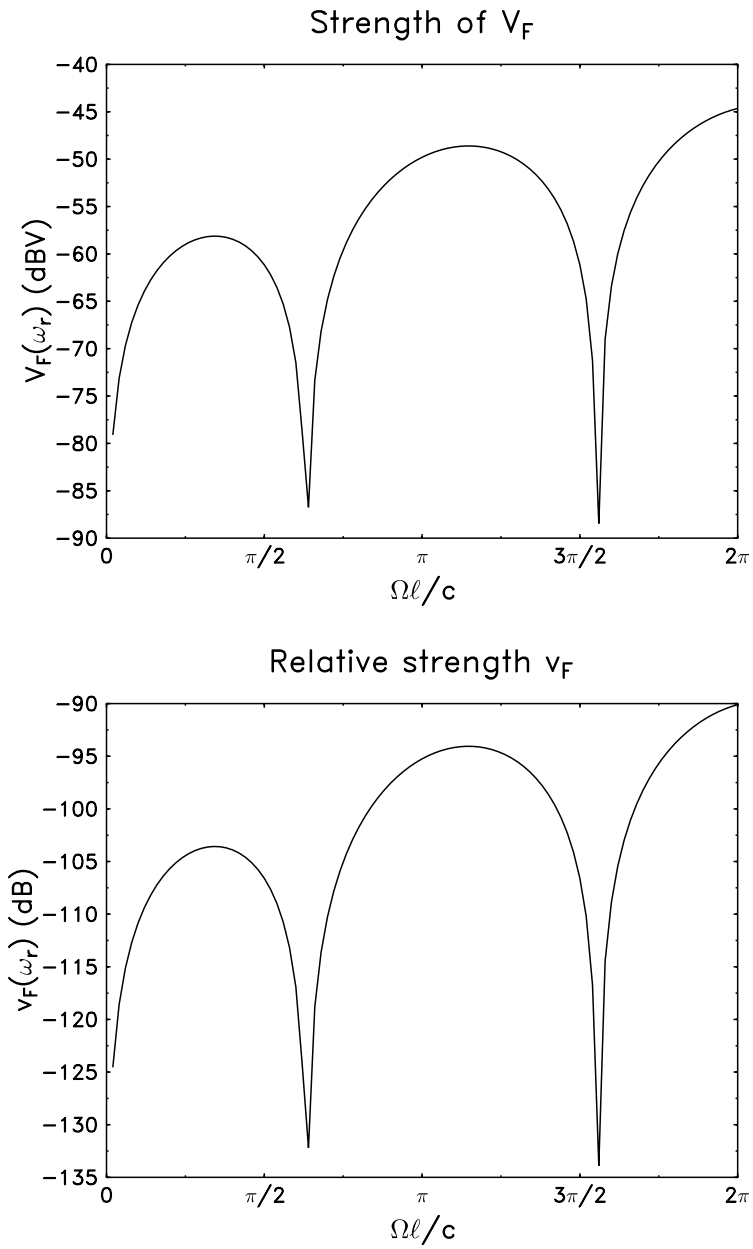

Figure 4 These two graphs show the relationship between $\tilde{V}_F(\omega_r)$, $\tilde{v}_F(\omega_r)$ as $\Omega\ell/c$ varies. We have only plotted the phase error from 0 to 2π and clearly both $\tilde{V}_F(\omega_r)$ and $\tilde{v}_F(\omega_r)$ grow as the $\Omega\ell/c$ increases. However this growth is in fact bounded above with $|\tilde{V}_F(\omega)| <$ 12.5 dBV or 4.2 V and $|\tilde{v}_F(\omega)| < -33$ dB for the numerical values given in (35).

PART II

The following pages will present the calculations for understanding the transfer functions from the generator of excitation to the autozero box. We will calculate the expected size of the tune line and show that it will be small compared to the revolution line in the spectrum. The difference in size between the revolution line and the tune line will determine the minimum dynamic range of the ADC needed for our measurements.

The tune measurement system basically consists of a kicker, pickup, and autozero box. See Figure 5.

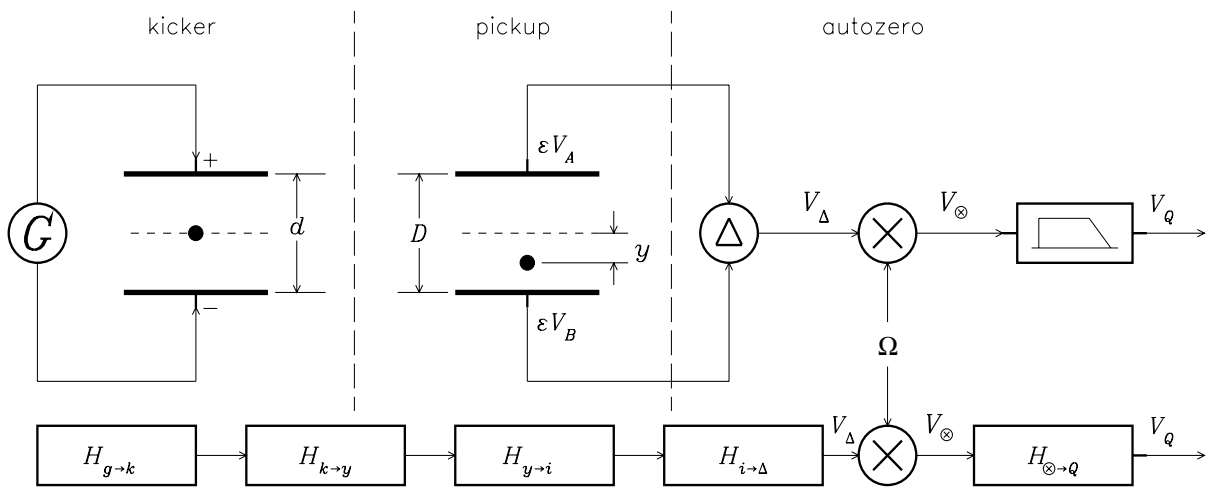

Figure 5 This is a schematic of the tune measurement system. The bunch is excited by the kickers and the signal is picked up by the pickups. The only relevant portions in the autozero box for signal processing are the summer, mixer and filter. The resulting voltage V_Q is sent to the ADC. The $\tilde{H}_{*\to *}$ are the transfer functions between the generator G etc to the filter. For this part of the calculation, the pickups are assumed to be perfect and the beam is going through the electrical centre of the pickup. y is just the oscillation from the tune.

For the purposes of calculating the strength of the tune line $\tilde{V}_Q$ — unlike the previous calculation for $\tilde{V}_F(\omega)$ — we will make the assumption that the pickups are perfect and only use the relevant parts of the autozero box which are the summer, mixer and filter to calculate $\tilde{V}_Q$. Since the pickups are perfect, the revolution lines can be perfectly suppressed when the attenuators are both set to ε because the beam is going through the electrical

centre of the pickup, thus $\tilde{V}_A \to \varepsilon\tilde{V}_A$ and $\tilde{V}_B \to \varepsilon\tilde{V}_B$. The roadmap to allow us to calculate $\tilde{V}_Q$ starts with the calculation of the following transfer functions:

(i) the transfer function from the generator to the kicker $\tilde{H}_{g\to k}$.

(ii) the transfer function from the kicker to produce a beam transverse position y at the pickup $\tilde{H}_{k\to y}$.

(iii) the transfer function from the transverse y position to produce a current in the pickups $\tilde{H}_{y\to i}$.

(iv) and the transfer function from the pickup current through the summer in the autozero box to produce $\tilde{H}_{i\to\Delta}$.

(v) A separate analysis of $\tilde{V}_\otimes$ because the mixer is a non-linear device.

(vi) Finally $\tilde{V}_Q$, after $\tilde{V}_\otimes$ goes through the filter with the transfer function $\tilde{H}_{\otimes\to Q}$.

TRANSFER FUNCTION FROM GENERATOR TO KICKER

We need to know the angular kick of the beam θ in terms of the potential difference V between the two kicker plates. In the electrostatic case, if we assume that the physical length of the kicker is ℓ in metres, the separation of the kicker plates is d in metres and the potential difference between the two kicker plates is V in volts, then the transverse momentum change dp is simply given by

$$\begin{aligned} dp &= \frac{e}{cd}\int_0^\ell dz\ V(z) \quad \text{in S.I. units} \\ &= \frac{1}{d}\int_0^\ell dz\ V(z) \qquad \text{in eV/c} \end{aligned} \tag{36}$$

However, because we have a kicker terminated at the both ends, there is a current flowing in the kicker plates and thus there is a contribution from the magnetic field as well. If we assume that the kicker plates are driven differentially, we can assume that the kicker plates form a TEM structure and thus $\boldsymbol{B}$ will supply an identical kick to the particle as $\boldsymbol{E}$, thus

$$dp = \frac{2}{d}\int_0^\ell dz\ V(z,t) \tag{37}$$

Therefore the angular displacement of the beam as a function of potential difference V between the plates is given by

$$dp/p = \theta(V) = \frac{2}{pd}\int_0^\ell dz\ V(z,t) \tag{38}$$

To calculate the transfer function $\tilde{H}_{g\to k}(\omega)$, we need to know how $V(z,t)$ varies as a function of its position z along the kicker as well as time. We will suppose that the kicker plates form a TEM structure which has a coupling impedance of Z_k. We will also assume that the upstream and downstream terminations of both plates are terminated

with $R_1 = R_2 = Z_{\rm odd}$ (refer to Appendix A). The boundary conditions are†

$$\begin{aligned} \tilde{I}_{\rm g}(0,\omega) &\neq 0 \\ \tilde{I}_{\rm g}(\ell,\omega) &= 0 \end{aligned} \tag{39}$$

Thus

$$\left.\begin{aligned} \tilde{V}(z,\omega) &= \frac{Z_{\rm odd}}{2}\tilde{I}_{\rm g}(0,\omega)e^{i\omega z/c} \\ \therefore \qquad V(z,t) &= \frac{Z_{\rm odd}}{2}I_{\rm g}(0,t-z/c) \end{aligned}\right\} \tag{40}$$

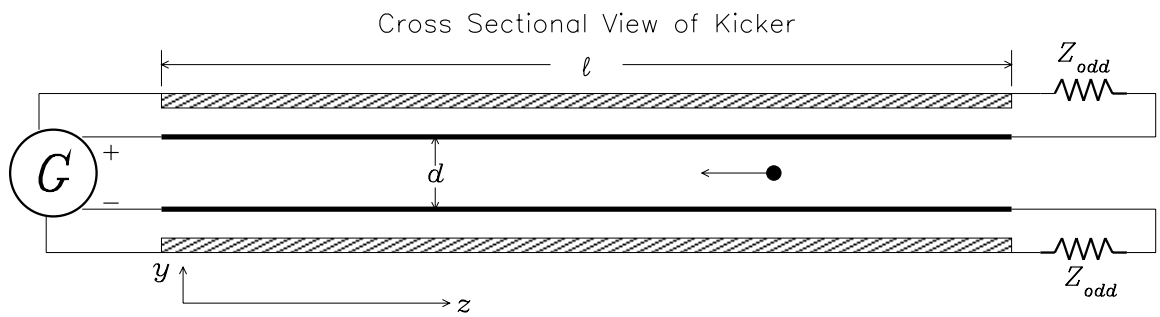

Figure 6 This is the cross sectional view of the kicker. The bunch must move towards negative z in this configuration in order for it to be kicked. The bunch moving towards positive z will not be kicked.

Let us introduce a new variable s which is the longitudinal position of a particle at $t = 0$, i.e. $z = s$ at $t = 0$. Since the particle is moving at c towards smaller z (See Figure 6), then clearly at any other time, the position of the particle is $z = s - ct$. Therefore, we can make a change of variable from t to s so that V no longer has any explicit time dependence which ensures that the particle is in the kicker when the integral is done

$$V(z,t) \to V(z,s) = \frac{Z_{\rm odd}}{2}I_{\rm g}(0,(s-2z)/c) \tag{41}$$

† Z_k does not explicitly appear in the calculations because the odd impedance $Z_{\rm odd}$ contains both the characteristic impedance Z_0 (impedance between kicker plate and wall) and the coupling impedance Z_k (impedance between kicker plates). The generator only sees $Z_{\rm odd}$ on each stripline which consists of the kicker plate and the wall.

Substituting (41) into (37), we have

$$dp = \frac{Z_{\rm odd}}{d} \int_0^\ell dz\ I_{\rm g}(0, (s-2z)/c) \tag{42}$$

where we have implicitly assumed that each kicker plate is driven differentially at $V/2$ and thus the potential difference between the plates is V.

To calculate $\tilde{H}_{g\to k}(\omega)$, we apply the trick discussed in the Appendix E, by letting $I_{\rm g}(0,t) = 1 \times e^{-i\omega' t}$, so that

$$\begin{aligned} \frac{dp}{p} &= \frac{Z_{\rm odd}}{pd} \int_0^\ell dz\ e^{-i\omega'(s-2z)/c} \\ &= \frac{Z_{\rm odd}}{pd} e^{-i\omega'(s-\ell)/c} \frac{\sin \omega' \ell/c}{\omega'/c} \end{aligned} \tag{43}$$

Thus the transfer function $\tilde{H}_{g\to k}(\omega)$, is obtained by identifying the coefficient of $e^{-i\omega' s/c}$ and letting $\omega' \to \omega$,

$$\tilde{H}_{g\to k}(\omega) = \frac{1}{pd} e^{i\omega\ell/c} \frac{\sin \omega\ell/c}{\omega/c} \tag{44}$$

There is no $Z_{\rm odd}$ in (44) because we want the excitation function to have the dimension of volts in the time domain.

TRANSFER FUNCTION FROM KICKER TO TRANSVERSE POSITION

We will calculate the transfer function from kicker to the transverse position at the pickup $\tilde{H}_{k\to y}(\omega)$ in this section.

We start first with the result from S. van der Meer who calculated the transverse position of one particle $y(s,t)$ as a function of s — the longitudinal position of the beam w.r.t. the kicker in the direction of the beam — after it is kicked by the kicker.

Suppose the kicker deflects the beam by $\theta e^{-i\omega t}$, then y must satisfy the following equations

$$\left.\begin{aligned} y(0,t) &= y(2\pi R_{\rm av}, t+2\pi/\omega_j) \\ y'(2\pi R_{\rm av}, t+2\pi/\omega_j) &= y'(0,t) - \theta e^{-i\omega t} \\ y'' + y\frac{1-\frac{1}{2}\beta\beta''+\frac{1}{4}\beta'^2}{\beta^2} &= 0 \qquad 0<s<2\pi R_{\rm av} \end{aligned}\right\} \tag{45}$$

where "$'$" is d/ds and $R_{\rm av} = \frac{1}{\omega_j}\frac{ds}{dt}$, ω_j is the revolution frequency of particle j and β is the usual lattice parameter.

The first condition of (45) simply states the periodic boundary condition that the transverse position of the particle is unchanged by the kick. The second condition states that the difference in angular position of the particle after one turn is $\theta e^{-i\omega t}$. And finally the third equation is just the usual differential equation from Courant-Snyder theory.

The solution which satisfies (45) is

$$y(s,t) = \frac{\theta\sqrt{\beta\beta_k}}{4}[A_1 e^{-i(\phi_1+\phi_2)} - A_2 e^{-i(\phi_1-\phi_2)}]e^{-i\omega t} \tag{46}$$

where

$$\left.\begin{aligned} \phi_1(\omega) &= \pi\omega/\omega_j - (\omega/\omega_j)(s/R_{\rm av}) \\ \phi_2 &= \pi Q - \mu \end{aligned}\right\} \tag{47}$$

and

$$\left.\begin{aligned} A_1(\omega) &= 1/\sin(\pi/\omega_j[\omega + Q\omega_j]) \\ A_2(\omega) &= 1/\sin(\pi/\omega_j[\omega - Q\omega_j]) \end{aligned}\right\} \tag{48}$$

where μ is the betatron phase with respect to the kicker, with the condition that $\mu = 2\pi Q$ at $s = 2\pi R_{\rm av}$ and $\beta = 1/\mu'$. The demonstration of how this solution is obtained is shown in Appendix F.

Thus using the results from and Appendix E and Appendix F, we obtain

$$\tilde{H}_{k\to y}(\omega, \omega_j) = \frac{\sqrt{\beta_s \beta_k}}{4}\left(A_1 e^{-i(\phi_1+\phi_2)} - A_2 e^{-i(\phi_1-\phi_2)}\right) \tag{49}$$

which is the transfer function for particle j from the kicker to s.

For the particular case of calculating y_j at the pickup $s = s_p$, we have $y_j = y_j(s_p, t) \equiv y_{p,j}$ at the pickup, we can rewrite $s_{p,j}/\dot{s}_{p,j}$ as

$$\begin{aligned} s_{p,j}/\dot{s}_{p,j} &= \tau_{kp} \qquad \text{is the time particle } j \text{ takes to arrive from the kicker to the pickup.} \\ &= T - \tau_{pk} \qquad \text{or written in terms of } T \text{ and the time from pickup to kicker.} \\ &= 2\pi/\omega_j - \tau_{pk} \end{aligned} \tag{50}$$

which we can use to rewrite the ϕ equations of (103) in Appendix F as

$$\left.\begin{aligned} \phi_1(\omega) &= \omega(-s_{p,j}/\dot{s}_{p,j} + \pi/\omega_j) = \omega(\tau_{pk} - \pi/\omega_j) \\ \phi_2 &= \pi Q - \mu_{p,j} = \pi Q - (2\pi Q - \mu_{pk}) = \mu_{pk} - \pi Q \end{aligned}\right\} \tag{51}$$

and thus (49) can be written in its full glory as

$$\tilde{H}_{k\to y}(s_p, \omega, \omega_j) = \frac{\sqrt{\beta_p \beta_k}}{4}\left(\frac{e^{-i[\omega(\tau_{pk}-\pi/\omega_j)+\mu_{pk}-\pi Q]}}{\sin(\frac{\pi}{\omega_j}[\omega + Q\omega_j])} - \frac{e^{-i[\omega(\tau_{pk}-\pi/\omega_j)-\mu_{pk}+\pi Q]}}{\sin(\frac{\pi}{\omega_j}[\omega - Q\omega_j])}\right) \tag{52}$$

TRANSFER FUNCTION FROM TRANSVERSE POSITION TO CURRENT

We will calculate the transfer function from the transverse position of the particle in the pickup to the current induced on the pickup $\tilde{H}_{y\to i}(\omega)$ in this section.

The current induced on the pickup plates A and B by particle j are given by

$$\left.\begin{aligned} I_{j,A}(t) &= \frac{I_j}{2}\left(1+\frac{2y_{\mathrm{orb},j}(t)}{D}+\frac{2y_{\mathrm{p},j}(t)}{D}\right) \equiv J_{\mathrm{DC}}+J_{\mathrm{orb}}+J_{\mathrm{Q}} \\ I_{j,B}(t) &= \frac{I_j}{2}\left(1-\frac{2y_{\mathrm{orb},j}(t)}{D}-\frac{2y_{\mathrm{p},j}(t)}{D}\right) \equiv J_{\mathrm{DC}}-J_{\mathrm{orb}}-J_{\mathrm{Q}} \end{aligned}\right\} \tag{53}$$

where $I_j = \alpha q \omega_j / 2\pi$ is the current from particle j and D is the separation between the two pickup plates. Notice that $J_{\mathrm{DC}} \pm J_{\mathrm{orb}}$ is the part that is taken care of by the autozero box as was discussed in Part I of this paper. J_Q, on the other hand, is ~ 20 kHz which is much larger than the bandwidth of the autozero box and thus is not suppressed. Therefore, the only relevant part of (53) for calculating $\tilde{H}_{y\to i}(\omega)$ is J_Q, thus

$$\left.\begin{aligned} & J_{\mathrm{Q}} = \frac{I_j y_{\mathrm{p},j}(t)}{D} \\ \Rightarrow \quad & \tilde{H}_{y\to i}(\omega,\omega_j) = I_j(\omega_j)/D \end{aligned}\right\} \tag{54}$$

TRANSFER FUNCTION FROM CURRENT TO VOLTAGE

In this section we will obtain the transfer function from current induced on the pickup plates to voltage as seen by one port of the summer $\tilde{H}_{i\to v}(\omega)$.

The voltage $\tilde{V}_j(0,\omega)$ at the summer from particle j is given by (See Appendix A and (8) in *Pickups*)

$$\tilde{V}_j(0,\omega) = \frac{Z_0}{2}\left(1 - e^{i2\omega L/c}\right)\tilde{I}_{j,(A,B)}(0,\omega) \tag{55}$$

where L is the length of the pickup.

Looking at the A plate of the pickup, $\tilde{V}_{j,A}(0,\omega)$ then goes through an attenuator so that $\tilde{V}_{j,A}(0,\omega) \to \varepsilon V_{j,A}(0,\omega)$ and similarly for $\tilde{V}_{j,B}(0,\omega)$ before going through the summer. Going through the summer, we have

$$\tilde{V}_\Delta(\omega) = 2\varepsilon\tilde{V}_j(0,\omega) = \varepsilon Z_0\left(1 - e^{i2\omega L/c}\right)\tilde{I}_j(0,\omega) \tag{56}$$

because $\tilde{I}_{j,A} = -\tilde{I}_{j,B} \equiv \tilde{I}_j$.

Therefore, the response function from particle j is

$$\tilde{H}_{i\to\Delta}(\omega) = \varepsilon Z_0\left(1 - e^{i2\omega L/c}\right) \tag{57}$$

After this point $\tilde{V}_\Delta$ goes through a mixer which is a non-linear device and the use of transfer functions break down at this point.

TRANSFER FUNCTION FROM GENERATOR TO SUMMER

As was mentioned previously, the mixer is a non-linear device and thus cannot be treated with the transfer function formalism. Thus we will multiply all our previously calculated transfer functions to get the transfer function from the generator to the summer $\tilde{H}_{g\to\Delta}(s_p,\omega,\omega_j)$ from particle j

$$\begin{aligned}\tilde{H}_{g\to\Delta}(s_p,\omega,\omega_j) &= \tilde{H}_{i\to\Delta}(\omega)\cdot\tilde{H}_{y\to i}(\omega,\omega_j)\cdot\tilde{H}_{k\to y}(s_p,\omega,\omega_j)\cdot\tilde{H}_{g\to k}(\omega)\\ &= \left[\varepsilon Z_0\left(1-e^{i2\omega L/c}\right)\right]\times\left[\frac{I_j(\omega_j)}{D}\right]\times\\ &\quad\left[\frac{\sqrt{\beta_{\rm pu}\beta_k}}{4}\left(A_1e^{-i(\phi_1+\phi_2)}-A_2e^{-i(\phi_1-\phi_2)}\right)\right]\times\left[\frac{1}{pd}e^{i\omega\ell/c}\frac{\sin\omega\ell/c}{\omega/c}\right]\end{aligned} \tag{58}$$

As a check on (58), we see that dimensionally in the time domain, we have

$$[\text{volt/volt}] = [\text{volt/amp}]\times[\text{amp/metre}]\times[\text{metre/rad}]\times[\text{rad/volt}] \tag{59}$$

which means that $\tilde{H}_{g\to\Delta}(s_p,\omega,\omega_j)$ is the voltage that will be seen after the summer due to a potential difference of 1 volt at the kicker.

Transfer function from Generator to Summer with Bunch distribution

Let the distribution of the particle revolution frequencies be $\rho(\omega_j)$ so that

$$\int_0^\infty d\omega_j\ \rho(\omega_j) = N \tag{60}$$

where N is the total number of particles in the distribution. Therefore the response function $\tilde{H}_{g\to\Delta}$ is simply given by

$$\tilde{H}_{g\to\Delta}(s_p,\omega) = \int_0^\infty d\omega_j\ \rho(\omega_j)\tilde{H}_{g\to\Delta}(s,\omega,\omega_j) \tag{61}$$

Let us define $P(\omega_j)$ to be the part of $\tilde{H}_{g\to\Delta}$ which depends on ω_j i.e.

$$P(\omega_j) \equiv \omega_j\left(A_1e^{-i(\phi_1+\phi_2)}-A_2e^{-i(\phi_1-\phi_2)}\right) \tag{62}$$

so that the part of (61) which contributes to the integral is

$$\int_0^\infty \rho(\omega_j)P(\omega_j)\,d\omega_j = \int_0^\infty \rho(\omega_j)\left(A_1 e^{-i(\phi_1+\phi_2)} - A_2 e^{-i(\phi_1-\phi_2)}\right)\omega_j\,d\omega_j \tag{63}$$

Substituting in ϕ_1, ϕ_2, A_1 and A_2 from (48) and (51) into (63), we have

$$\begin{aligned}\int_0^\infty \rho(\omega_j)P(\omega_j)\,d\omega_j = e^{-i(\mu_{pk}+\omega\tau_{pk})}\int_0^\infty \frac{e^{i\frac{\pi}{\omega_j}[\omega+\omega_j Q]}\rho(\omega_j)\omega_j}{\sin\left(\frac{\pi}{\omega_j}\left[\omega+\omega_j Q\right]\right)}\,d\omega_j - \\ e^{i(\mu_{pk}-\omega\tau_{pk})}\int_0^\infty \frac{e^{i\frac{\pi}{\omega_j}[\omega-\omega_j Q]}\rho(\omega_j)\omega_j}{\sin\left(\frac{\pi}{\omega_j}\left[\omega-\omega_j Q\right]\right)}\,d\omega_j\end{aligned} \tag{64}$$

Now $1/\sin(\pi x/x_0)$ can be expanded as

$$\frac{1}{\sin\left(\pi\frac{x}{x_0}\right)} = -\frac{1}{\pi}\sum_{n=-\infty}^{\infty}\frac{(-1)^n}{n-\frac{x}{x_0}} \tag{65}$$

Therefore

$$\frac{1}{\sin\frac{\pi}{\omega_j}(\omega\pm Q\omega_j)} = -\frac{1}{\pi}\sum_{n=-\infty}^{\infty}(-1)^n\frac{\omega_j}{(n\mp Q)\left(\omega_j-\frac{\omega}{n\mp Q}\right)} \tag{66}$$

Substituting (66) into (64), we have

$$\begin{aligned}\int_0^\infty \rho(\omega_j)P(\omega_j)\,d\omega_j = -\frac{e^{-i(\mu_{pk}+\omega\tau_{pk})}}{\pi}\sum_{n=-\infty}^{\infty}\frac{(-1)^n}{(n-Q)}\int_0^\infty \frac{e^{i\frac{\pi}{\omega_j}[\omega+\omega_j Q]}\rho(\omega_j)\omega_j^2}{\omega_j-\frac{\omega}{n-Q}}\,d\omega_j + \\ \frac{e^{i(\mu_{pk}-\omega\tau_{pk})}}{\pi}\sum_{n=-\infty}^{\infty}\frac{(-1)^n}{(n+Q)}\int_0^\infty \frac{e^{i\frac{\pi}{\omega_j}[\omega-\omega_j Q]}\rho(\omega_j)\omega_j^2}{\omega_j-\frac{\omega}{n+Q}}\,d\omega_j\end{aligned} \tag{67}$$

Let us define $R(\omega,\omega_j,Q)$ to be

$$R(\omega,\omega_j,Q) \equiv e^{i\frac{\pi}{\omega_j}[\omega+\omega_j Q]}\rho(\omega_j)\omega_j^2 \tag{68}$$

then (67) can be written as

$$\begin{aligned}\int_0^\infty \rho(\omega_j)P(\omega_j)\,d\omega_j = -\frac{e^{-i(\mu_{pk}+\omega\tau_{pk})}}{\pi}\sum_{n=-\infty}^{\infty}\frac{(-1)^n}{(n-Q)}\int_0^\infty \frac{R(\omega,\omega_j,+Q)}{\omega_j-\frac{\omega}{n-Q}}\,d\omega_j + \\ \frac{e^{i(\mu_{pk}-\omega\tau_{pk})}}{\pi}\sum_{n=-\infty}^{\infty}\frac{(-1)^n}{(n+Q)}\int_0^\infty \frac{R(\omega,\omega_j,-Q)}{\omega_j-\frac{\omega}{n+Q}}\,d\omega_j\end{aligned} \tag{69}$$

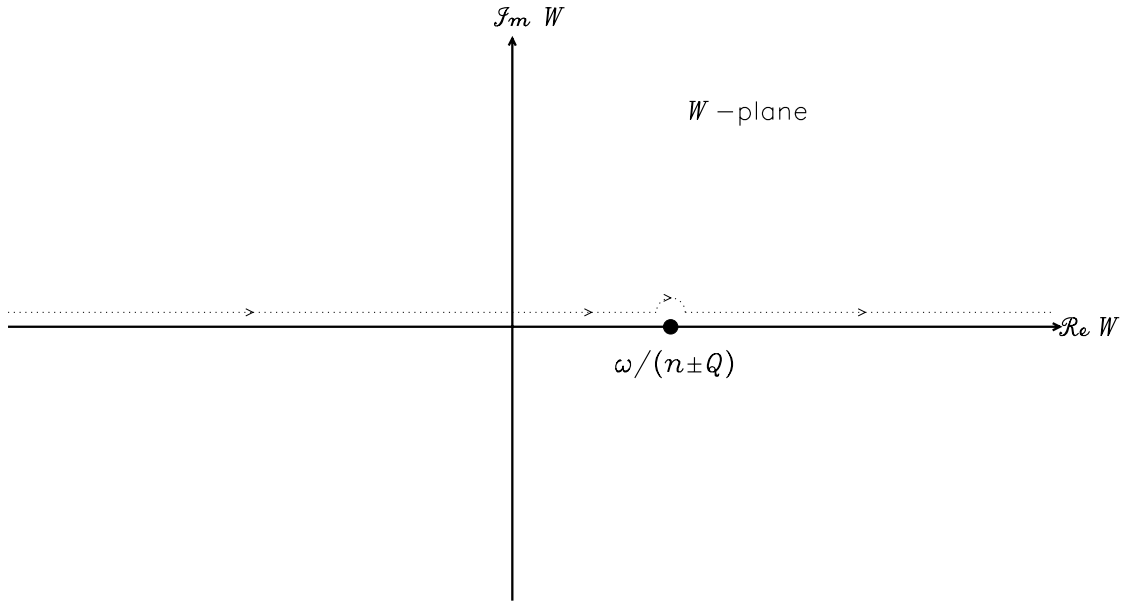

Figure 7 The line integral used to calculate $\int_0^\infty \frac{R(\omega,\omega_j,\pm Q)}{\omega_j - \frac{\omega}{n\mp Q}}\, d\omega_j$. Note that this integral is actually ill-defined because we have to integrate through the pole because we cannot integrate around a closed contour (any contour either in the upper or lower half plane does not vanish as the radius of the contour goes to infinity). We choose the line integral to go above the pole because doing so will give us a physically correct answer. See *Mathematics for Physicists, P. Dennery and A Krzywicki* who show that this type of integral is path dependent.

If we assume that $\rho(\omega_j) = 0$ for $\omega_j < 0$, then the lower limit of the integrals in (69) can be mapped $0 \to -\infty$ and if we allow ω_j to be complex, so that $\omega_j \to W \in \mathbb{C}$ in (69), we can consider the line integral shown in Figure 7 in the W-plane

$$\begin{aligned}\int_0^\infty \frac{R(\omega,\omega_j,\pm Q)}{\omega_j - \frac{\omega}{n\mp Q}}\, d\omega_j &= \int_{-\infty}^\infty \frac{R(\omega,W,\pm Q)}{W - \frac{\omega}{n\mp Q}}\, dW \\ &= \mathrm{P}\int \frac{R(\omega,W,\pm Q)}{W - \frac{\omega}{n\mp Q}}\, dW - i\pi \sum \mathrm{Res}\left[\frac{R(\omega,W,\pm Q)}{W - \frac{\omega}{n\mp Q}}\right]\end{aligned} \tag{70}$$

Notice that we have not assumed that the integrand vanishes in the upper half plane

because it does not. Therefore, (69) becomes

$$\left.\begin{array}{l}\displaystyle\int_0^\infty \rho(\omega_j)P(\omega_j)\,d\omega_j = \\ \displaystyle -\frac{e^{-i(\mu_{pk}+\omega\tau_{pk})}}{\pi}\times \\ \displaystyle\sum_{n=-\infty}^{\infty}\frac{(-1)^n}{(n-Q)}\left\{\mathrm{P}\int\frac{R(\omega,W,+Q)}{W-\frac{\omega}{n-Q}}\,dW - i\pi\sum\mathrm{Res}\left[\frac{R(\omega,W,+Q)}{W-\frac{\omega}{n-Q}}\right]\right\}+ \\ \displaystyle\frac{e^{i(\mu_{pk}-\omega\tau_{pk})}}{\pi}\times \\ \displaystyle\sum_{n=-\infty}^{\infty}\frac{(-1)^n}{(n+Q)}\left\{\mathrm{P}\int\frac{R(\omega,W,-Q)}{W-\frac{\omega}{n+Q}}\,dW - i\pi\sum\mathrm{Res}\left[\frac{R(\omega,W,-Q)}{W-\frac{\omega}{n+Q}}\right]\right\}\end{array}\right\} \tag{71}$$

Special Case

Let us again consider the special case where the frequency distribution is parabolic, i.e.

$$\rho(\omega_j) = \begin{cases} -\dfrac{6N(\omega_j-\omega_1)(\omega_j-\omega_2)}{(\omega_2-\omega_1)^3} & \text{for } \omega_1 < \omega_j < \omega_2 \\ 0 \qquad \text{otherwise} \end{cases} \tag{72}$$

We will also assume that

$$\left.\begin{array}{l}\left|\dfrac{\omega_2-\omega_1}{\omega_r}\right| \ll 1 \qquad \text{with } \omega_1 < \omega_r < \omega_2 \\ \qquad 0 < \omega_1 < \omega_2\end{array}\right\} \tag{73}$$

where ω_r is the revolution frequency of the reference particle, so that only one pole is within the frequency region of interest.

With the conditions in (73), the poles at $W = 0$ of R do not contribute in (71) and

thus becomes

$$\left.\begin{array}{l}\displaystyle\int_0^\infty \rho(\omega_j)P(\omega_j)\,d\omega_j = \\ -\dfrac{e^{-i(\mu_{pk}+\omega\tau_{pk})}}{\pi}\times \\ \displaystyle\sum_{n=-\infty}^{\infty}\frac{(-1)^n}{(n-Q)}\left\{\mathrm{P}\int\frac{R(\omega,W,+Q)}{W-\frac{\omega}{n-Q}}\,dW - i\pi\bar{R}\left(\omega,\frac{\omega}{n-Q},+Q\right)\right\}+ \\ \dfrac{e^{i(\mu_{pk}-\omega\tau_{pk})}}{\pi}\times \\ \displaystyle\sum_{n=-\infty}^{\infty}\frac{(-1)^n}{(n+Q)}\left\{\mathrm{P}\int\frac{R(\omega,W,-Q)}{W-\frac{\omega}{n+Q}}\,dW - i\pi\bar{R}\left(\omega,\frac{\omega}{n+Q},-Q\right)\right\}\end{array}\right\} \tag{74}$$

where

$$\bar{R}\left(\omega,\frac{\omega}{n\mp Q},\pm Q\right) = \begin{cases} R\left(\omega,\dfrac{\omega}{n\mp Q},\pm Q\right) & \omega_1 < \frac{\omega}{n\mp Q} < \omega_2 \\ 0 & \text{otherwise}\end{cases} \tag{75}$$

There is a contribution from the residue whenever a pole is within ω_1 and ω_2. This clearly occurs when

$$\left.\begin{array}{ll}\omega = (n-Q)\omega_r & \text{for } \bar{R}\left(\omega,\frac{\omega}{n-Q},+Q\right) \\ \omega = (n+Q)\omega_r & \text{for } \bar{R}\left(\omega,\frac{\omega}{n+Q},-Q\right)\end{array}\right\} \tag{75}$$

and thus the resonances occur at $\omega = (n \pm Q)\omega_r$. Therefore, the $\tilde{H}_{g\to\Delta}$ spectrum consists of a background which comes from the principal parts of (74) and resonant lines from the residues $\bar{R}$ which contribute whenever $\omega = (n \pm Q)\omega_r$. Substituting (74) back into (58)

gives us

$$\tilde{H}_{g\to\Delta}(s_p,\omega) = \left[\varepsilon Z_0\left(1-e^{i2\omega L/c}\right)\right]\left[\frac{\alpha N q}{2\pi D}\right]\left[\frac{\sqrt{\beta_{\rm pu}\beta_k}}{4}\right]\left[\frac{1}{pd}e^{i\omega\ell/c}\frac{\sin\omega\ell/c}{\omega/c}\right]\times$$
$$\left[-\frac{e^{-i(\mu_{pk}+\omega\tau_{pk})}}{\pi}\times\right.$$
$$\sum_{n=-\infty}^{\infty}\frac{(-1)^n}{(n-Q)}\left\{\mathrm{P}\int\frac{R(\omega,W,+Q)}{W-\frac{\omega}{n-Q}}\,dW - i\pi\bar{R}\left(\omega,\frac{\omega}{n-Q},+Q\right)\right\}+$$
$$\frac{e^{i(\mu_{pk}-\omega\tau_{pk})}}{\pi}\times$$
$$\left.\sum_{n=-\infty}^{\infty}\frac{(-1)^n}{(n+Q)}\left\{\mathrm{P}\int\frac{R(\omega,W,-Q)}{W-\frac{\omega}{n+Q}}\,dW - i\pi\bar{R}\left(\omega,\frac{\omega}{n+Q},-Q\right)\right\}\right] \tag{76}$$

for the parabolic distribution.

MIXER AND FILTER

Next, $\tilde{H}_{g\to\Delta}$ goes through a mixer with the local oscillator frequency at Ω with the same phase chosen in *Feedback* we get from Appendix D

$$\tilde{V}_{\otimes}(\omega) = -\frac{1}{2i}\left[e^{-i\Omega L/c}\tilde{H}_{g\to\Delta}(\omega+\Omega) - e^{i\Omega L/c}\tilde{H}_{g\to\Delta}(\omega-\Omega)\right] \tag{77}$$

Then, finally $\tilde{V}_{\otimes}$ goes through the filter with its 3 dB point at at $2\omega_r$, and we have

$$\tilde{V}_Q(\omega) = -\frac{1}{2i\sqrt{1+\frac{\omega^2}{4\omega_r^2}}}\left[e^{-i\Omega L/c}\tilde{H}_{g\to\Delta}(\omega+\Omega) - e^{i\Omega L/c}\tilde{H}_{g\to\Delta}(\omega-\Omega)\right] \tag{78}$$

which is the tune voltage that we would measure when the kicker is set to a potential difference of 1 V.

The result after substituting in (76) into (78) is

$$\begin{aligned}\frac{\tilde{V}_Q(Q\omega_r)}{\varepsilon Z_0 \alpha N q \omega_r \rho(\omega_r)} &\equiv \tilde{v}_Q \\ &= \frac{1}{8\pi p D d \omega_r \rho(\omega_r)}\sqrt{\frac{\beta_{\mathrm{pu}}\beta_k}{1+Q^2/4}}\times \\ &\qquad \left[-\frac{1}{2i}\left(e^{-i\Omega L/c}\tilde{H}((Q+M)\omega_r) - e^{i\Omega L/c}\tilde{H}((Q-M)\omega_r)\right)\right]\end{aligned} \tag{79}$$

where $\tilde{H}$ is defined in Appendix G.

SPECIAL CASE

Let us consider two special cases with the following numerical values together with the earlier numbers which we used to calculate $\tilde{V}_F$ and $\tilde{v}_F$

$$\left.\begin{array}{ll} \omega_r = 2\pi \times (47 \times 10^3 \text{ Hz}) & \beta_{\text{pu}} = 100 \text{ m} \\ L = 0.5 \text{ m} & \beta_k = 80 \text{ m} \\ \ell = 1.0 \text{ m} & \tau_{\text{pk}} = 25/c \text{ s} \\ D = 7.62 \times 10^{-2} \text{ m} & Q = 0.4898 \\ d = 7.62 \times 10^{-2} \text{ m} & M = 1127 \\ \mu = \pi & V = 1 \text{ V across kicker} \end{array}\right\} \tag{80}$$

The first special case is when $p = 150$ GeV/c, we arrive at $\tilde{V}_Q(Q\omega_r) = -66.5$ dBV or 0.47 mV, $\tilde{v}_Q = -112$ dB.

The second special case is when $p = 1$ TeV/c, we arrive at $\tilde{V}_Q(Q\omega_r) = -83$ dBV or 0.071 mV, $\tilde{v}_Q = -128.5$ dB.

Taking the worst case scenario in which $\tilde{v}_F^{\max} = -33$ dB, the minimum dynamic range for the first case is 79 dB and for the second case it is 95.5 dB. This implies that we require at least 96 dB of dynamic range for the ADC which translates to a minimum requirement of 16 bits for the ADC. Figure 8 shows a plot of the tune for the given numerical values.

ACKNOWLEDGEMENTS

The author would like to thank J. Steimel for his lively discussions and for reading this manuscript, and D. McGinnis for designing the autozero box and for may hours of discussion.

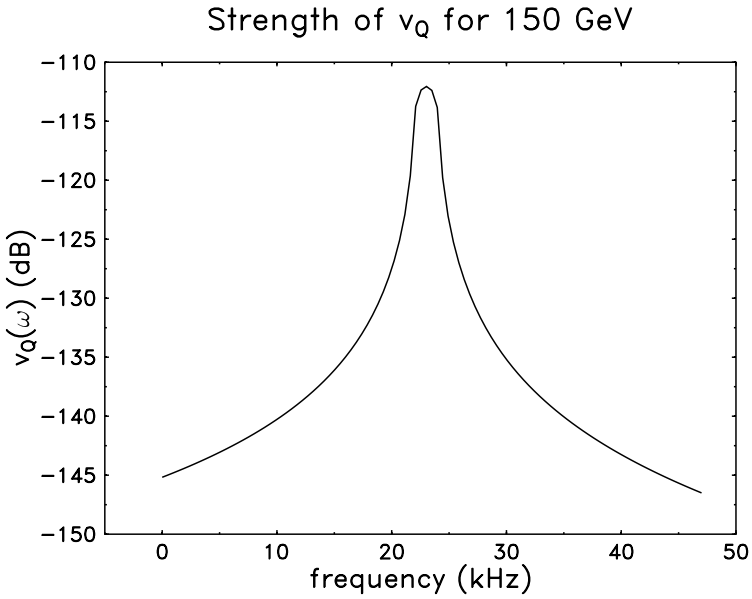

Figure 8 This graph shows $\tilde{v}_Q$ for the 150 GeV/c case. The graph is simply shifted by -16.5 dB for the 1 TeV/c case.

APPENDICES

APPENDIX A

We shall derive $\tilde{V}_A(\omega)$ and $\tilde{V}_B(\omega)$ here.

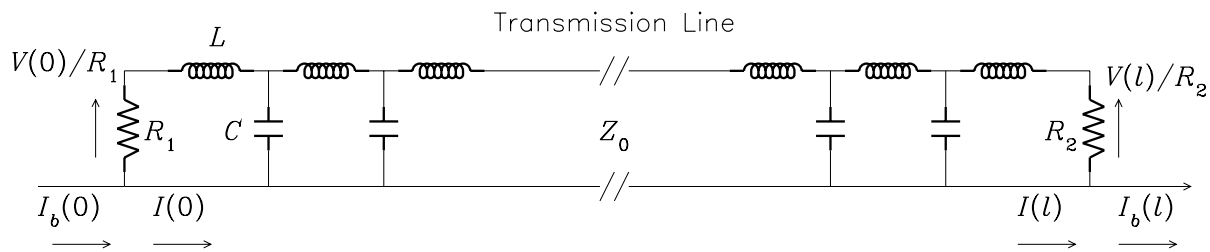

Figure 9 This is the transmission line model of the stripline. The ends of the transmission line are terminated by R_1 and R_2. The length of the line is l.

Using the transmission line model shown in Figure 9, it is easy to show that the current I and voltage V measured anywhere along the stripline satisfies the wave equation

$$\left(\frac{\partial^2}{\partial z^2} - \frac{1}{c}\frac{\partial^2}{\partial t^2}\right)\left\{\begin{array}{c} I(z,t) \\ \\ V(z,t) \end{array}\right\} = 0 \tag{81}$$

It is also easy to show that the relationsahip between I and V is

$$\left.\begin{array}{l} \dfrac{\partial V}{\partial z} = -L\dfrac{\partial I}{\partial t} \\ \dfrac{\partial I}{\partial z} = -C\dfrac{\partial V}{\partial t} \end{array}\right\} \tag{82}$$

Fourier transforming (81), gives us

$$\left(\frac{\partial^2}{\partial z^2} + k^2\right)\left\{\begin{array}{c} \tilde{I}(z,\omega) \\ \\ \tilde{V}(z,\omega) \end{array}\right\} = 0 \tag{83}$$

where $k = \omega/c$.

The boundary conditions at R_1 and R_2 must satisfy current conservation, therefore

$$\left.\begin{aligned} \left[-\tilde{I}_b + \frac{\tilde{V}}{R_1} + \tilde{I}\right]_{z=0} &= 0 \\ \left[\tilde{I}_b + \frac{\tilde{V}}{R_1} - \tilde{I}\right]_{z=l} &= 0 \end{aligned}\right\} \tag{84}$$

where our sign convention is that positive current flows out of a node.

The general solution to (81) is given by

$$\left.\begin{aligned} \tilde{V} &= Fe^{ikz} + Ge^{-ikz} \\ \tilde{I} &= \frac{1}{Z_0}\left(Fe^{ikz} - Ge^{-ikz}\right) \end{aligned}\right\} \tag{85}$$

where we have applied the Fourier transformed resultes of (82) that $\tilde{V}$ and $\tilde{I}$. F and G are constants to be solved from the boundary conditions and $Z_0 = \sqrt{L/C}$.

Substituting (85) into (84) to solve for the constants, we have

$$\left.\begin{aligned} F &= \frac{1}{\begin{vmatrix} a_1 & b_1 \\ a_2 & b_2 \end{vmatrix}}\left[b_2\tilde{I}_b(0) + b_1\tilde{I}_b(l)\right] \\ G &= \frac{-1}{\begin{vmatrix} a_1 & b_1 \\ a_2 & b_2 \end{vmatrix}}\left[a_2\tilde{I}_b(0) - a_1\tilde{I}_b(l)\right] \end{aligned}\right\} \tag{86}$$

where

$$\left.\begin{aligned} a_1 &= \frac{1}{R_1} + \frac{1}{Z_0} \qquad & a_2 &= \left(\frac{1}{R_2} - \frac{1}{Z_0}\right)e^{ikl} \\ b_1 &= \frac{1}{R_1} - \frac{1}{Z_0} \qquad & b_2 &= \left(\frac{1}{R_2} + \frac{1}{Z_0}\right)e^{-ikl} \end{aligned}\right\} \tag{87}$$

Using the above results, the voltage measured at $z = 0$ is simply

$$\tilde{V}(0,\omega) = F + G \tag{88}$$

Solving F and G for the boundary conditions $R_1 = Z_0$, $R_2 = Z_0$, gives us

$$\tilde{V}_A(\omega) = \frac{Z_0}{2}\left(\tilde{I}_b(\omega,0) - e^{i\omega l/c}\tilde{I}_b(\omega,l)\right) \tag{89}$$

Changing the boundary conditions to $R_1 = Z_0$, $R_2 = Z_0$ and $Z_0 \to Z_0 + \Delta Z e^{i\omega\ell/c}$, gives us

$$\tilde{V}_B(\omega) = \left[\frac{Z_0}{2}\left(1 + \frac{\Delta Z e^{i\omega\ell/c}}{2Z_0}\right) - \frac{\Delta Z e^{i\omega\ell/c}}{4} e^{i2\omega l/c}\right] \tilde{I}_B(\omega, 0) - \frac{Z_0}{2} e^{i\omega l/c} \tilde{I}_B(\omega, l) \tag{90}$$

if $\Delta Z/Z_0 \ll 1$.

APPENDIX B

We derive the attenuation factor $10^{-kV_{\text{set}}/20}$ here.

Let V_{set} be the voltage which sets the level of attenuation. If V_{in} is the input voltage to the attenuator, and V_{out} is the output voltage after attenuation, then

$$\left.\begin{aligned} 20\log_{10}\frac{V_{\text{out}}}{V_{\text{in}}} &= -kV_{\text{set}} \\ \therefore \quad V_{\text{out}} &= V_{\text{in}} 10^{-kV_{\text{set}}/20} \end{aligned}\right\} \tag{91}$$

where k is the gain of the attenuator.

APPENDIX C

To show that $\tilde{V}_F(0,k)$ which was derived as Equation (28) is correct, we have to show that $\tilde{V}_\Delta(\omega)$ is zero $\forall\omega$ when $\ell = 0$. From the definition of $\tilde{V}_\Delta(\omega)$, we have

$$\begin{aligned}\tilde{V}_\Delta(\omega) &= \varepsilon\tilde{V}_A(\omega) - \tilde{V}_B(\omega)10^{-k\tilde{V}_F(0)/20} \\ &= \varepsilon\tilde{V}_A(\omega) - \frac{\varepsilon\tilde{V}_B(\omega)\left(1-\frac{2\Delta}{D}\right)}{\left(1+\frac{\Delta Z}{2Z_0}\right)\left(1+\frac{2\Delta}{D}\right)} \\ &\equiv 0\end{aligned} \tag{92}$$

as required.

The requirement that $\ell = 0$ is quite clear. Introducing a phase error $e^{i\omega\ell/c}$ is equivalent to introducing extra reflections to $V_B(t)$. Thus $V_A(t)$ and $V_B(t)$ can never cancel.

APPENDIX D

Let us derive the Fourier transform of

$$m(t) = f(t) \sin \Omega(t - t') \tag{93}$$

Clearly

$$m(t) = \frac{f(t)}{2i} \left[e^{i\Omega(t-t')} - e^{-i\Omega(t-t')} \right] \tag{94}$$

Fourier transforming the above, we have

$$\tilde{m}(\omega) = \frac{1}{2i} \left[e^{-i\Omega t'} \int_{-\infty}^{\infty} f(t) e^{i(\omega+\Omega)t} \, dt - e^{i\Omega t'} \int_{-\infty}^{\infty} f(t) e^{i(\omega-\Omega)t} \, dt \right] \tag{95}$$

We can make a change of variables

$$\left. \begin{aligned} \omega_+ &= \omega + \Omega \\ \omega_- &= \omega - \Omega \end{aligned} \right\} \tag{96}$$

so that (95) can be easily transformed to

$$\left. \begin{aligned} \tilde{m}(\omega) &= \frac{1}{2i} \left[e^{-i\Omega t'} \tilde{f}(\omega_+) - e^{i\Omega t'} \tilde{f}(\omega_-) \right] \\ &= \frac{1}{2i} \left[e^{-i\Omega t'} \tilde{f}(\omega + \Omega) - e^{i\Omega t'} \tilde{f}(\omega - \Omega) \right] \end{aligned} \right\} \tag{97}$$

APPENDIX E

We will derive the McGinnis trick for obtaining transfer functions here.

Suppose the input function is

$$f(t) = e^{-i\omega' t} \tag{98}$$

then the convolution between the transfer function $H(t)$ and $f(t)$ is

$$g(t) = \int_{-\infty}^{\infty} dt' \; H(t-t') e^{-i\omega' t'} \tag{99}$$

$H(t-t')$ can be written as a Fourier transform and thus $g(t)$ becomes

$$\left.\begin{aligned} g(t) &= \frac{1}{2\pi} \int_{-\infty}^{\infty} dt' \; \left[\int_{-\infty}^{\infty} d\omega \; \tilde{H}(\omega) e^{-i\omega(t-t')} \right] e^{-i\omega' t'} \\ &= \frac{1}{2\pi} \int_{-\infty}^{\infty} dt' \; \left[\int_{-\infty}^{\infty} d\omega \; \tilde{H}(\omega) e^{-i\omega t} \right] e^{i(\omega-\omega')t'} \\ &= \int_{-\infty}^{\infty} d\omega \; \tilde{H}(\omega) e^{-i\omega t} \delta(\omega - \omega') \\ &= \tilde{H}(\omega') e^{-i\omega' t} \\ \Rightarrow g(0) &= \tilde{H}(\omega) \end{aligned}\right\} \tag{100}$$

Again, we have defined our Fourier transform pairs as

$$\left.\begin{aligned} f(t) &= \frac{1}{2\pi} \int_{-\infty}^{\infty} d\omega \; \tilde{f}(\omega) e^{-i\omega t} \\ \tilde{f}(\omega) &= \int_{-\infty}^{\infty} dt \; f(t) e^{i\omega t} \end{aligned}\right\} \tag{101}$$

APPENDIX F

We will demonstrate the calculation of $\tilde{H}_{k\to y}$ using van der Meer's solution for y when the kick is of the form $\theta \sin \omega t$. van der Meer gave the following solution for the jth particle

$$\left.\begin{aligned} y_j = \frac{\theta\sqrt{\beta\beta_k}}{4} \Bigg[& \frac{\sin\left(\omega\left[t - \frac{s_j}{\Omega_j}R_{\text{av}} + \frac{\pi}{\Omega_j}\right] + \pi Q - \mu\right)}{\sin\left(\frac{\pi}{\Omega_j}\left[\omega + Q\Omega_j\right]\right)} - \\ & \frac{\sin\left(\omega\left[t - \frac{s_j}{\Omega_j}R_{\text{av}} + \frac{\pi}{\Omega_j}\right] - \pi Q + \mu\right)}{\sin\left(\frac{\pi}{\Omega_j}\left[\omega - Q\Omega_j\right]\right)} \Bigg] \end{aligned}\right\} \tag{102}$$

where R_{av} is the average radius of the ring. Let us define the following

$$\left.\begin{aligned} \phi_1(\omega) &= \pi\omega/\Omega_j - (\omega/\Omega_j)(s/R_{\text{av}}) \\ \phi_2 &= \pi Q - \mu \end{aligned}\right\} \tag{103}$$

and

$$\left.\begin{aligned} A_1(\omega) &= 1/\sin(\pi/\Omega_j[\omega + Q\Omega_j]) \\ A_2(\omega) &= 1/\sin(\pi/\Omega_j[\omega - Q\Omega_j]) \end{aligned}\right\} \tag{104}$$

then (102) can be written as

$$\begin{aligned} y_j &= \frac{\theta\sqrt{\beta\beta_k}}{4}\left[A_1\sin(\omega t + \phi_1 + \phi_2) - A_2\sin(\omega t + \phi_1 - \phi_2)\right] \\ &= \frac{\theta\sqrt{\beta\beta_k}}{8i}\Big[\left(A_1 e^{i(\phi_1+\phi_2)} - A_2 e^{i(\phi_1-\phi_2)}\right)e^{i\omega t} - \\ &\qquad \left(A_1 e^{-i(\phi_1+\phi_2)} - A_2 e^{-i(\phi_1-\phi_2)}\right)e^{-i\omega t}\Big] \end{aligned} \tag{105}$$

Now using the results of Appendix E and using linearity, we can write (105) in terms of the response function $\tilde{H}_{k\to y}$

$$y_j = \frac{1}{2i}\left[\tilde{H}_{k\to y}(-\omega)e^{i\omega t} - \tilde{H}_{k\to y}(\omega)e^{-i\omega t}\right] \tag{106}$$

Therefore, the response function is

$$\tilde{H}_{k\to y}(\omega) = \frac{\theta\sqrt{\beta\beta_k}}{4}\left(A_1 e^{-i(\phi_1+\phi_2)} - A_2 e^{-i(\phi_1-\phi_2)}\right) \tag{107}$$

APPENDIX G

Let us calculate

$$\tilde{V}_{\otimes}(Q\omega_r) = -\frac{1}{2i}\left[e^{-i\Omega L/c}\tilde{H}_{g\to\Delta}(Q\omega_r+\Omega) - e^{i\Omega L/c}\tilde{H}_{g\to\Delta}(Q\omega_r-\Omega)\right] \tag{108}$$

From (76), let us gather the terms which contain ω,

$$\begin{aligned}\tilde{H}(\omega) \equiv & \left(1-e^{i2\omega L/c}\right)e^{i\omega\ell/c}\frac{\sin\omega\ell/c}{\omega/c}\times \\ & \Bigg[-\frac{e^{-i(\mu_{pk}+\omega\tau_{pk})}}{\pi}\times \\ & \sum_{n=-\infty}^{\infty}\frac{(-1)^n}{(n-Q)}\left\{\mathrm{P}\int\frac{R(\omega,W,+Q)}{W-\frac{\omega}{n-Q}}\,dW - i\pi\bar{R}\left(\omega,\frac{\omega}{n-Q},+Q\right)\right\}+ \\ & \frac{e^{i(\mu_{pk}-\omega\tau_{pk})}}{\pi}\times \\ & \sum_{n=-\infty}^{\infty}\frac{(-1)^n}{(n+Q)}\left\{\mathrm{P}\int\frac{R(\omega,W,-Q)}{W-\frac{\omega}{n+Q}}\,dW - i\pi\bar{R}\left(\omega,\frac{\omega}{n+Q},-Q\right)\right\}\Bigg]\end{aligned} \tag{109}$$

where

$$R(\omega,\omega_j,Q) \equiv e^{i\frac{\pi}{\omega_j}[\omega+\omega_j Q]}\rho(\omega_j)\omega_j^2 \tag{110}$$

and

$$\bar{R}\left(\omega,\frac{\omega}{n\mp Q},\pm Q\right) = \begin{cases} R\left(\omega,\frac{\omega}{n\mp Q},\pm Q\right) & \omega_1 < \frac{\omega}{n\mp Q} < \omega_2 \\ 0 & \text{otherwise}\end{cases} \tag{111}$$

Then

$$
\begin{aligned}
&e^{-i\Omega L/c}\tilde{H}(\omega+\Omega) = \\
&\quad -\frac{2ie^{i(\omega L+(\omega+\Omega)\ell)/c}}{(\omega+\Omega)/c}\sin\frac{(\omega+\Omega)L}{c}\sin\frac{(\omega+\Omega)\ell}{c}\times \\
&\quad \left[-\frac{e^{-i[\mu_{pk}+(\omega+\Omega)\tau_{pk}]}}{\pi}\times\right. \\
&\qquad \sum_{n=-\infty}^{\infty}\frac{(-1)^n}{(n-Q)}\left\{\mathrm{P}\int\frac{R(\omega+\Omega,W,+Q)}{W-\frac{\omega+\Omega}{n-Q}}\,dW - i\pi\bar{R}\left(\omega+\Omega,\frac{\omega+\Omega}{n-Q},+Q\right)\right\}+ \\
&\quad \frac{e^{i[\mu_{pk}-(\omega+\Omega)\tau_{pk}]}}{\pi}\times \\
&\qquad \left.\sum_{n=-\infty}^{\infty}\frac{(-1)^n}{(n+Q)}\left\{\mathrm{P}\int\frac{R(\omega+\Omega,W,-Q)}{W-\frac{\omega+\Omega}{n+Q}}\,dW - i\pi\bar{R}\left(\omega+\Omega,\frac{\omega+\Omega}{n+Q},-Q\right)\right\}\right]
\end{aligned}
\tag{112}
$$

where $\Omega = M\omega_r$ and $M \gg 1$.

To evaluate (112) for the case when $\omega = Q\omega_r$, we have to look at the first $\bar{R}$ in (112) and only consider the special case when $\omega = (n-M-Q)\omega_r$

$$
\bar{R}((n-Q)\omega_r,\omega_r,+Q) = (-1)^n\rho(\omega_r)\omega_r^2 \tag{113}
$$

because $\bar{R}$ vanishes otherwise. And similarly, the second $\bar{R}$ does not vanish when $\omega = (n-M+Q)\omega_r$

$$
\bar{R}((n+Q)\omega_r,\omega_r,-Q) = (-1)^n\rho(\omega_r)\omega_r^2 \tag{114}
$$

Thus we see that the special case when $\omega = Q\omega_r$, (112) becomes

$$
\left.
\begin{aligned}
&e^{-i\Omega L/c}\tilde{H}((Q+M)\omega_r) = \\
&\quad -\frac{2ie^{i(QL+(Q+M)\ell)\omega_r/c}}{(Q+M)\omega_r/c}\sin\frac{(Q+M)\omega_r L}{c}\sin\frac{(Q+M)\omega_r\ell}{c}\times \\
&\quad \left[\frac{e^{i[\mu_{pk}-(Q+M)\omega_r\tau_{pk}]}}{\pi}\times\right. \\
&\quad \left.\frac{(-1)^M}{(Q+M)}\left\{\mathrm{P}\int\frac{R((Q+M)\omega_r,W,-Q)}{W-\frac{(Q+M)\omega_r}{M+Q}}\,dW - (-1)^M i\pi\rho(\omega_r)\omega_r^2\right\}\right]
\end{aligned}
\right\}
\tag{115}
$$

because the sum $\sum \frac{(-1)^n}{(n-Q)} \ldots$ vanishes because $Q\omega_r \neq (n-M-Q)\omega_r \quad \forall n \in \mathbb{Z}$.

Similarly

$$\left.\begin{aligned} & e^{i\Omega L/c}\tilde{H}((Q-M)\omega_r) = \\ & \quad -\frac{2ie^{i(QL+(Q-M)\ell)\omega_r/c}}{(Q-M)\omega_r/c}\sin\frac{(Q-M)\omega_r L}{c}\sin\frac{(Q-M)\omega_r \ell}{c}\times \\ & \quad \left[\frac{e^{i[\mu_{pk}-(Q-M)\omega_r\tau_{pk}]}}{\pi}\times\right. \\ & \quad \left.\frac{(-1)^M}{(Q-M)}\left\{\mathrm{P}\int\frac{R((Q-M)\omega_r, W, -Q)}{W-\frac{(Q-M)\omega_r}{M+Q}}\,dW - (-1)^M i\pi\rho(\omega_r)\omega_r^2\right\}\right] \end{aligned}\right\} \quad (116)$$

Using the results of (115) and (116), we can can define a dimensionless quantity $\tilde{v}_Q = \tilde{V}_Q(Q\omega_r)/\varepsilon Z_0 \alpha N q \omega_r \rho(\omega_r)$

$$\tilde{v}_Q = \frac{1}{8\pi p D d\omega_r\rho(\omega_r)}\sqrt{\frac{\beta_{\mathrm{pu}}\beta_k}{1+Q^2/4}}\left[-\frac{1}{2i}\left(e^{-i\Omega L/c}\tilde{H}((Q+M)\omega_r) - e^{i\Omega L/c}\tilde{H}((Q-M)\omega_r)\right)\right] \quad (117)$$

which can be used to compare with $\tilde{v}_F(\omega_r)$ calculated in *Feedback*.

REFERENCES

[1] *A different formulation of the Longitudinal and Transverse Beam Response* , S. van der Meer, CERN/PS/AA/80-4 , January 1980.

[2] *A Transverse Damper System for the SPS in the Era of the LHC*, D. McGinnis, July 95.