TM - 1000
8055.000

Fermilab

The Proton Beam Lithium Lens for the Fermilab Antiproton Source

B. F. Baynov, A. D. Chernyakin, Yu. N. Pertrov, G. N. Silvestrov,
V. G. Volokov & T. A. Vsevolozhskaya
Institute for Nuclear Physics, Novosibirsk USSR

and

J. A. MacLachlan
Fermilab

August 7, 1980

Introduction

The development of the antiproton source for the Fermilab $\bar{p}p$ Colliding Beam project (Tevatron Phase I) is a collaborative effort which includes work on $\bar{p}$ production and electron cooling of $\bar{p}$'s by the Institute for Nuclear Physics at Novosibirsk (INP). This note describes the construction and performance of a high current focusing device, lithium lens, built by INP to focus the 80 GeV proton beam onto the production target. This lens has been tested and refined over the period 1979-1980 and is a further development of a concept which was employed for e^+ production and collection at INP as early as 1975.(1)

The lens described here is to be used together with a larger one, now being built, which will be the first focusing element collecting $\bar{p}$'s in the secondary beam. The very strong focusing provided by the first lens does not seem very important by itself because the proton beam has such small emittance that ordinary quadrupoles are nearly adequate to give the optimum beam spot size; the gain from the use of the first lens alone is about a factor of 1.5 relative to quadrupole focusing. However, the second lens makes a much greater

difference, perhaps a factor of four, and its upstream beryllium window cannot survive the beam of protons which fail to interact in the target unless that beam has very rapid divergence from the target, that is, a very strong focus in the target. The only other way to reduce the intensity of noninteracting protons at the entrance to the second lens is to move it farther downstream. To do so, however, while still collecting the same fraction of the production cone results in an impossibly large collection lens. While the alternative of a magnetic horn is not considered in this note it can be said in passing that, while a suitable horn system is possible, it is by no means trivial.[2] The condition of rapid divergence of the proton beam with the emittance $\varepsilon = 5 \cdot 10^{-7}$m is satisfied if its β -function in the target center is $\beta \approx 1$ cm. The resulting angle of beam convergence is

$$\alpha_c = \sqrt{\varepsilon/\beta} = \sqrt{5\times 10^{-7}/.01} = 7\times 10^{-3}$$

Therefore, the field integral along an extreme particle trajectory must be

$$\int B\,dl = \alpha_c B\rho = \alpha_c \times 80\,GeV/c/.03 = 18.7\,kGm$$

If one will accept 10% beam loss by nuclear absorption, the lens can be of length ℓ = 12 cm; therefore the field required will be $\gtrsim$ 150 kG. In reference (3) it was shown that, if the choice of initial ratio between skin depth δ and lens radius R_0 is made taking into account the δ increase during the current pulse due to resistive heating, one can obtain a field of 170 kG on the surface of the lithium cylinder without melting the lithium. This result is the principal motivation for the choice of 150 kG for the design of a practical lithium lens. The relation between R_0 and δ arises from the optimization of the conflicting demands that the current distribution be uniform (δ/R_0 large) and the resistive heating be tolerable (short current pulse giving (δ/R_0 small).

For δ/R_0 = .7 the current distribution is uniform to $\sim$.5%. The value of β at the focus is fixed by the choice of B_{max} and ℓ only; the focal length F is a free parameter which determines the lens radius R_0 as $R_0 = F \frac{B_{max}\ell}{pc}$ or $R_0 = \alpha_c F$. The main restriction on the choice of R_0 comes from multiple scattering. Because the angle of multiple scattering ϑ_{sc} adds in quadrature to the angular spread in the beam it is adequate to limit it to less than about one half the beam spread $\alpha_B = \varepsilon/R_0$ evaluated at the principal plane, viz,

$$R_0 < \frac{1}{2}\varepsilon/\vartheta_{sc}$$

For a lens of length ℓ = 12 cm the multiple scattering of an 80 GeV proton beam is $\sqrt{\langle\vartheta_{sc}^2\rangle} \approx 6\times10^{-5}$. The aperture limit is thus $R_0 < 4.2$ mm and the corresponding requirement on focal length is F < 60 cm. From a technical standpoint the minimum radius compatible with the basic requirements is desirable because it requires the least excitation current. The lower the current the less demand on current contacts, the less heat dissipation, the less field energy, and the less stress on the end flanges. The stress on the flanges at the ends of the lens is in fact proportional to R_0^2. R_0 cannot be made arbitrarily small, however. The condition above relating R_0 to the skin depth means that small R_0 requires a short current pulse; a short pulse requires a high voltage power supply ($V \propto 1/R_0$). Even more fundamental is a requirement for nearly constant field during the beam spill. Recognizing that field variation during the spill adds to the angular spread of the beam one requires the current be constant to $\pm 5 \times 10^{-3}$ during the 1.6μsec spill so that $\Delta\alpha_c = 5 \times 10^{-3}\alpha_c < \alpha_B$. For this reason the pulse must be at least 18 μsec and R_0 must be > .7 mm.

The actual parameters chosen for the lens which is being built and tested by INP are consistent with the above considerations. These parameters are ℓ = 12 cm, B_{max} = 150 kG, R_0 = .25 cm. The resulting focal length

$$F = [K^{1/2} \sin(K^{1/2} \ell)]^{-1} = 35\,\text{cm}$$

where

$$K = \frac{dB}{dr} \times \frac{.03}{E}$$

(B in kG, R in m, E in GeV). This lens gives a β -function of 1 cm at the focus for $\varepsilon = 5 \times 10^{-7}$m as required. The amplitude of the unipolar current pulse must be 200 kA with a full width duration of 50 μsec corresponding to the skin depth $\sim$2 mm.

The practical design of this lens has passed through two stages. The first design was optimized for the original Fermilab $\bar{p}$ proposal[4] to provide B_{max} = 100 kG at a 13 Hz repetition rate. Perhaps the most difficult problem for this stage was to provide adequate cooling. This lens is now a finished product with a history of $> 10^7$ pulses. It is used in the tests described later in this note. The second stage of design is a development project to adapt the original lens to provide 150 kG operation at .5 Hz repetition rate. The major problem here is not the heating but rather the mechanical stress on the inner structure. Because the cooling requirement is less severe this structure is being strengthened by use of thicker material for the walls of the cooling channel.[5] The choice of the thickness is based in part on the test of maximum sustainable field reported in this note. The 13 Hz lens and its air insulated pulse transformer is essentially a completed system which could be shipped to Fermilab for beam tests whenever appropriate administrative steps are taken. This note describes further tests which explore the extent to which the presently available lens is adaptable to the current Fermilab scheme.

The specific purpose here is present in detail the physical and electrical characteristics of the existing lithium lens, the pulse transformer on which it is mounted, and the mounting which provides for precise remote positioning and simple replacement of the lens. It is intended to provide adequate information to allow detailed target station design. A description of performance tests and a summary of test results is included. The power supply requirements and a simple but practical high voltage system will be described. What is reported is the result of work done at INP. The role of the Fermilab author has been as a participant in the tests during May-July 1980.

General Features

In simplest terms the lens itself is a lithium current conductor of .5 cm diameter and 10 cm length which excited by 60 μsec unipolar pulse of $\sim 2 \cdot 10^5 A$ producing a peak field $\sim 1.6 \times 10^5$ G. The pulse is sufficiently long that the skin depth is nearly equal to the conductor radius and the current distribution is therefore uniform to $\sim$.5% except near the ends where the current enters and leaves.[3] Uniform current distribution gives a magnetic field within the conductor which is proportional to the distance from the axis; that is, there is a constant field gradient with axial symmetry. The lithium is cooled by water flowing in a double wall titanium tube which contains the cylindrical lithium conductor. The mounting for the lens is an integral part of the secondary of an air-insulated pulse transformer which provides the current. The pulse transformer and lens assembly are shown in Figure 1. The iron magnetic circuit of the transformer has gaps so that the secondary can be slid in and out of mesh with the primary. By mounting two lens/secondary assemblies on the remotely positionable support frame one has the possibility of rapidly replacing one lens by another without direct access or intervention by a complicated

manipulator. This frame provides as well fine horizontal and vertical adjustability to facilitate the precise alignment which is critical in a beam line with small beam spot size and high gradients.

The power supply used in the tests described later consists of a 100 μF capacitor bank charged by a variable supply capable of at least 7 kV. The capacitor bank is discharged by an ignitron switch through the primary of a pulse transformer of cable construction. After the peak of the pulse a crowbar ignitron is fired to shunt the load with a resistance providing approximately critical damping thereby preventing backward conduction through the discharge ignitron and unnecessary current through the lens.

The complete pulse transmission and matching system consists of three pulse transformers. The first with a 1:4 ratio permits the capacitor bank to be connected over a considerable distance by parallel flexible coaxial cables without introducing unacceptable parasitic inductance. The next transformer with turns ratio of 6:1 is of similar construction and must connect to very low inductance line. In the test set-up this line consisted of $\sim$1 m of 20 cm wide copper strip line with approximately 4 mm spacing. In the final installation where this line must carry the current from the high radiation area near the target to a convenient low radiation area perhaps 6 m distant, it might be made instead as air insulated coax using $\sim$10 cm diameter copper outer conductor. The second transformer drives the air insulated transformer of 6:1 ratio to which the lens is attached directly for the lowest attainable stray inductance.

Details of the Lens and its Fabrication

Despite the simplicity of the concept the lithium lens is complicated in reality because of mechanical requirements arising from high stress produced by the magnetic field, the need for low resistance, low inductance uniform

current feed, the need for water cooling, and the chemical reactivity of the lithium. For the successful integration of these requirements innovation was needed in the choice of materials and fabrication techniques. A longitudinal section through the lens is shown in Figure 2. Several details are worth notice and elaboration.

Operation of cylindrical lenses with magnetic fields of 100 kOe and higher is accompanied by a strong heating of lithium ($\Delta T_p \gtrsim 70^{o}C$ at H = 100 kOe, $\Delta T_p \propto H^2$). This necessitates the creation of structures which are able not only to withstand the nechanical stresses caused by the pressure of a magnetic field but also by the thermal expansion of lithium. Lithium has a large coefficient of volume expansion ($\eta = 1.8 \cdot 10^{-4}$) and 1.5% volume increase during melting. To simplify the construction, it is expedient to choose an operational mode in which the lithium does not melt during pulsed heating. In this case, the cooling system should provide such a dissipation of heat liberated in lithium that the average temperature of the operating part of the lens is not higher than $T_{AV} = T_M - \Delta T_p$. This is of great importance for many Hertz operation of a lens.

With the above arguments taken into account, such a variant of the construction has been chosen to provide a maximum cooling of the operating part of the lens (Fig. 2). The operating part of the lens is a thin-wall titanium cylinder (1) filled with lithium (2). On the outside, this cylinder is in contact with water (3), as shown in Fig. 2. The titanium cylinder is the most important element of the construction, responsible for its reliability, and it should satisfy contradictory requirements. Since, at a homogenous density, the current circulating in the lens is distributed between titanium and lithium inversely proportionally to their resistances, the cylinder's wall thickness should be minimum in order that $\frac{I_{Ti}}{I_{Li}} = \frac{\rho_{Li} S_{Ti}}{\rho_{Ti} S_{Li}} < 0.1$. The cylinder has been made from high-Om titanium alloy BT-6 with $\rho_{Ti} = 1.6 \times 10^{-6} \Omega m$ ($\rho_{Li} = 10^{-7} \Omega m$),

so that $I_{Ti}/I_{Li} \approx .06$, for example, if the wall thickness is $\Delta = 1$ and $R_0 = 2.5$ mm. Titanium alloys have a low thermal conductivity coefficient ($\lambda = 0.018 \frac{\text{cal}}{\text{cm sec } ^oC}$). In view of this, a minimum thickness of the cylinder wall is needed also for decreasing the temperature drop $\Delta T_q \sim \Delta$ when dissipating heat from lithium. On the other hand, a titanium cylinder should withstand the loads caused by the action of a magnetic field and also by the expansion of lithium during heating. Since lithium is in a closed container, the inner (1) and outer (4) titanium cylinders are the structural elements which are elastically deformed due to volume expansion of lithium. It is assumed here that under the pressure of a few hundreds of atmospheres lithium behaves as a liquid. The wall thicknesses of these cylinders are chosen such that under the pressure not higher than 1000 atm the sizes lie within the elastic deformations and the stresses to be sustained do not exceed $\sigma \approx 3500$ kg/cm^2 permissible for titanium alloys. At the ends of the inner cylinder the walls are smoothly enlarged to avoid the concentration of the stresses caused by the force moments appearing at the joining of the inner and outer cylinders. Welding of the outer and inner cylinders is performed over their outer perimeter (6) in order to increase the welding area. Two ways of welding were tested; electron-beam vacuum welding and electric-arc welding in an argon atmosphere. The latter way is a simpler one and gives satisfactory results in an oxygenless atmosphere. To remove stresses after welding, annealing is done by heating the entire internal titanium part together with the ceramic insulators (11,12) up to 900°C in vacuum. A water circuit (3,9) to provide uniform water flow throughout the internal cylinder is formed by placing between the titanium cylinders (1,4) additional separating cylinders (8) and an internal ceramic insert (12). These additional cylinders and ceramic are cut diametrically in half. This allows them to be put on the internal cylinder before welding. A ceramic ring (11) serves as an insulator

dividing the parts of the lens at different potentials. To seal the joint between ceramic and titanium, a heat softened copper foil is used, which is compressed before welding with a special device to copper yield. The current feed to the operating part of the lens is through the peripheral lithium (5) which is contained by steel turnings (7,14). The outside of these turnings are the current contacts which are tightly clamped to the secondary turn of the air insulated transformer. At each end of the lens assembly is an oxide coated titanium end cap (19) with a beryllium beam window (15). The end cap is insulated electrically from the current contacts by a BeO ceramic ring (20) which is protected against cracking by the thin lead washers (21) either side of it. The window and ceramic insulator are fit into a titanium flange (18). The inside surface of the window and this flange are covered by a titanium foil (16) to seal the joint between them. The seal between current contact (7) and the end cap assembly and also flanges of the outer titanium cylinders is provided by the narrow lead washers (13,17). The structure is united by six longitudinal rods (10) threaded at the ends for nuts. The rods carry no current because the end caps are oxide coated and the rods are glass coated or wrapped with polyamide film.

Thermal Conditions of the Lens

As has been mentioned above, in a multiHertz operational mode the problem is to dissipate the heat liberated in the operating part of the lens. At a 100 kOe field and a 0.5 cm diameter of the lens, the heat released during one pulse in lithium amounts to $Q_p \approx 7$ cal per each centimeter or 35 cal/cm^3. This heat is carried away by the water through the thin wall of the inner titanium cylinder, and the temperature drop ΔT_λ on titanium may be evaluated as $\Delta T_\lambda = \frac{Q_p \Delta}{\lambda \tau 2\pi (R_0 + \Delta/2)}$. At a 10 Hz operation frequency (τ = 0.1 sec) and Δ = 0.7 mm wall thickness

the temperature drop ΔT_{λ} is equal to 150^{0}, and the power dissipated by the water from the cylinder's surface is q = 140 W/cm^2. The gap between the inner and separating (8) cylinders through which the water flows is equal to 0.5 mm, so that if the water consumption is $\sim$5/1min, its velocity can be about 6 m/sec, and the temperature drop between water and titanium can be $\Delta T_{W} \approx 20^{0}$C. Hence, the mean temperature of lithium in this operational mode of the lens can be $T_{AV} = \Delta T_{\lambda} + \Delta T_{W} + T_{OW} = 180^{0}$C. However, this does not mean that the pulsed heating will lead to melting the lithium, since the melting heat for lithium (Q_m = 83 cal/cm^3) is higher than the heat amount liberated per each pulse (35 cal/cm^3). Note, that lithium melting is not a limitation of principle on the lens operation, and it leads only to increasing the mechanical stresses in the structure due to a sharp additional expansion of lithium during melting. In the paper/3/ several structures are described and the experimental results are presented aimed at obtaining magnetic fields up to 300 kOe on the lithium cylinders. With such magnetic field the pulsed heating of lithium was $\Delta T_{P} \approx 800^{0}$C. Of course, this calculation is only an approximate estimate intended for the choice of the main parameters of a lens. The experiments performed showed that at a 13 Hz continuous frequency and a 100 kOe field, in the limiting operational mode of the lens, the average temperature of lithium, which was measured with a thermocouple located at the lens centre, was $T_{AV} \approx 170^{0}$C.

Filling the Lens with Lithium

The process by which the lens is filled with lithium free of voids and weak spots has been described elsewhere,[6] but an attempt to make a lens using only such a description would doubtless show it is not possible to convey adequately the sum of several years practical experience. The following observations touch upon special techniques and precautions, but any laboratory intending make similar lenses should plan on significant time and effort for learning.

The general scheme for introducing the lithium is shown in Figure 3. The lens is filled with molten lithium under pressure established by a hydraulic system. The lens (1) and a hydraulic cylinder (2) containing the lithium are placed in an electric furnace (3) capable of bringing the entire mass up to the fusion temperature of lithium ($186^{o}C$) in an hour or so. The lens is flushed with argon and argon under pressure is then used to check for leaks between the lens and cylinder or the lens and the exit port tube (3). Then the argon pressure is maintained a little above atmosphere to keep air out of the lens. The pressure on the sylphon bellows (4) containing the lithium is set at 100 kg/cm^2 and the heating begun. At some 10°-15° below the melting temperature lithium begins plastic flow into the lens. Temperature is monitored by thermocouples (5,6,7). When the lithium melts, all three thermocouples quickly come to the lithium melting temperature and within a few seconds molten lithium bridges the insulating gap (8) in the exit tube and closes a circuit signaling the end of the first phase of the filling. At this time water is circulated through the exit port cooling jacket (9) to form a solid plug in the exit port and the oven is turned off. Air is circulated through the lens cooling channel to bring the temperature down to about $120^{o}C$; at this temperature the pressure is raised to 200-300 kg/cm^2 and the cooling continued for 1-2 hours. After this stage the temperature is below $100^{o}C$ and the pressure is increased to 700 kg/cm^2. In order to avoid voids or weak spots it is important to maintain a significant temperature gradient toward the axis of the lens so that the lithium is always pushing out against a strong constraining force.

Some miscellaneous remarks on the filling process and the handling of lithium are included for their possible usefulness to someone contemplating a similar development. First of all, though lithium oxidizes rapidly in air and reacts with water it is not difficult to handle in the laboratory. The metal is generally stored in alcohol or petrolatum. A nugget can be taken into the

hands to have its oxide coat scraped off with a knife to prepare clean lithium for filling the sylphon bellows. The cleaned lithium can be melted over an open gas flame in a steel crucible. The molten metal is skimmed of an oxide skin and poured into the sylphon. In the apparatus shown in Figure 3 the sylphon is cemented to the top of the hydraulic cylinder just by the adhesion of the lithium that has solidified in contact with it. Lithium should always be handled with the understanding that combusion can easily occur in air and probably will on some occasion, particularly if there is contamination of tools or containers. One wants to avoid inhaling the oxide which is quite irritating to throat and lungs; as much of the work as possible should be done under a hood.

The Air-Insulated Transformer and Mounting Frame

The lens assembly described above must be coupled to a source of large pulsed current with very low resistance and inductance. This requirement is met by a sequence of three pulse transformers which match more manageable current to a current transmission system and then to the lens. The lens is mounted directly to the secondary of the last transformer of this sequence by mating fittings machined from the same block of aluminium from which the secondary itself is machined. This transformer shown in Figure 1 is roughly 30 cm long, 14 cm wide, and 21 cm high. The six turn primary is machined from a single block of aluminium. The laminated iron core is enclosed within a stainless steel box. The single turn secondary can be slid in and out of the primary because the core is not continued through the center of the turns. The center of each primary turn, however, is filled with an iron block. It would be possible to put similar blocks in the centers of the parallel secondary turns for slightly better flux linkage, but this is somewhat difficult mechanically. An even better way to improve the coupling is to make the current connections

for the lens in such a way that the top of them can be taken off for removing the lens. In this case there is no need to remove the secondary from the primary for lens replacement so the core can make complete circuit. Such a mounting is in fact under development and test and is sketched in Figure 4. Another solution is to insert a core piece through both primary and secondary after the secondary has been put in place. In this case removal of the lens/secondary assembly requires removal of the core piece first. Although both of these alternatives are practical neither is felt necessary for a system as small as the proton beam lens. The alternate current contact (Figure 4) may be more convenient regardless of the core design, however; it may become the preferred mounting if it proves satisfactory electrically. Simply loosening clamps and lifting out the lens is much easier for a radioactive lens than withdrawing it from a cylindrical cavity.

The mounting frame is designed to carry two lens/secondary assemblies. A small d.c. motor is geared down to drive a positioning screw between limits set by microswitches. About 30 seconds are required to replace an assembly by the adjacent one. The same drive can easily be used for precision alignment. Another motor and drive is used to make small changes in vertical position. The secondary is held rigidly and precisely in place on the frame by fitting over two tapered pins. It is locked down by wedges on the secondary top plate which are forced through the slots in the positioning pins by a cam actuator. The water supply and return leads are provided with flexible bellows to follow the travel of the mounting frame. The water connection to the lens is made by compression fittings sealed with lead washers.

Pulsed Current Supply

The power supply system is described below not only to document the tests of the lens but also to indicate some ideas which may be useful in an operational system. A similar approach could be adopted because the required pulse rate is well within the capabilities of the ignitrons (up to .3 Hz). Whether one would use ignitrons rather an thyristor stack or whatnot is an engineering matter involving considerations of availability, reliability, etc. which may involve conditions and preferences of a particular engineer or laboratory as well. However, the use of ignitrons is worth considering on the basis of simplicity and reasonable service life of $\sim 10^6$ pulses.

The supply scheme shown in Figure 5 consists of a low inductance energy storage capacitor C_1 = 100 μF which is charged by an adjustable high voltage. The capacitor is discharged by triggering ignitron V1 with about 2 kV positive-going pulse. The specifications of the ignitrons are given in Table I. At some time after the current maximum, about 35 μs after the trigger pulse, the crowbar ignitron V2 is pulsed to shunt the load with a low inductance resistor R_2. The value of R_2 is determined by minimizing the power dissipated in the load and gives somewhat less than critical damping:

$$R_2 \approx .8\sqrt{L/C_1} = .15\,\Omega$$

where L is the effective load inductance. This resistor is made of .05 mm titanium foil 1 m long and 10 cm wide folded back on itself at the midpoint with about .5 mm of insulation between the layers. Neither pulse timing is critical because the current maximum is broad and the crowbar can be fired almost any time after the zero-crossing of the capacitor voltage with only some difference in the power dissipated in the lens. Therefore, no provision is made for controlled heating of the ignitrons or stabilization of the firing circuits.

Because the basic character of the load (lens) is inductive, i.e., the production of magnetic field, the design aim for the power supply is to minimize stray inductance so that field is produced only where it is wanted and system efficiency is satisfactory. The lens inductance is $\sim 5 \times 10^{-8}$ H so that transformer matching is required to separate the power supply from the lens. The transformer T3 on which the lens is mounted has turns ratio 6:1 (measured current ratio 1:4) permitting a few meters of low L (low Z) line to another current step-up transformer T_2 of the same turns ratio but more efficient construction. If one aims for less than 10% stray inductance from the transmission lines one is limited to say a few 10^{-8} H from T3 to T2 about 10^{-6} H from T2 to T1, and less than 10^{-7} H in the supply itself because the inductance seen in the primary circuit of T1 is given by the inductance values multiplied by the squares of the turns ratios of the intervening transformers. In the power supply to T1 and from T2 to T3 $\sim$20 cm wide parallel conductor copper strip line with 4 mm organic insulation is used. Between T1 and T2 two parallel 50 coaxial cables with net inductance 1.25×10^{-7} H/m are used. The distances are roughly C1 to T1 1 m, T1 to T2 1 m, and T2 to T3 2 m. Estimating the inductances of the strip lines.

$$L = \mu_0 d/w$$

where d is the separation and w is the width, one has about 3×10^{-8} H C1 to T1, 2.5×10^{-7} H T1 to T2, and 2.5×10^{-8} H T2 to T3. The ignitron switch itself contributes 5×10^{-8} H (Table 1). It has already been noted above that, should the final installation require it, the run from T1 to T2 can be 50 m and the run from T2 to T3 can be 6 m with suitable choices for the lines used.

System Tests

During the months of May-July 1980 the system described was operated for $\sim 10^5$ pulses at various currents and in various test configurations. These tests were intended to test the suitability of the lens, intended for 100 kG at 13 Hz, for 150 kG operation and to find its electrical and mechanical parameters and operational characteristics. The electrical properties considered include the inductance and resistance distribution, the time stability, breakdown voltage for insulation, and the maximum current. Mechanical considerations include the effects of mounting/remounting, sensitivity to impact and vibration, and durability of the water cooling circuit. Two lenses of the same design were used. One of these was assembled and filled for these tests. The other, upon which the trial of maximum excitation was made, had a history of about 10^7 pulses at 125 kA.

The first measurement was to find the current ratios for each of the transformers as a function of the voltage V_c on the storage capacitor. Each of the pickup loops (P_1-P_4 in Figure 4) had been previously calibrated against a precision shunt. These loops ("Rogaski belts") have very little response to current that does not pass through them. The measurements consisted of recording on a storage scope the outputs of the four loops and the precision shunt R_3. Each pickup was recorded on a different pulse but the approximate constancy of the voltage V_c was monitored. Enough of the measurements were repeated to establish that the measurement error was 5%. No investigation was made of possible calibration errors etc., but there is little cause to expect them at so high a level. These measurements were made both for the lens system and a test system made with the lens replaced by an approximate electrical equivalent made of 1 cm thick copper end discs separated by a 10 cm steel tube of outer diameter 12 mm and inner diameter 8 mm. The results for both are given

in Table II. The Table shows that only for the air-insulated transformer does the current ratio differ significantly from the turns ratio and only for this transformer is there a major variation with current. The efficiency of this transformer runs from 70% to 50%. This figure could be improved with a complete iron core as mentioned above, but for a load as small as this lens the inefficiency does not seem too high a price for the mechanical convenience of windings that can be slid apart. In Figure 6 the maximum magnetic field in the lens

$$B_{max} = \mu_0 I/(2\pi R_0) = 8 \times 10^{-5} I \quad ,$$

where B_{max} is in Tesla, I is the peak current in amperes, and R_0 is the lens radius in meters, is plotted vs. the storage capacitor voltage V_C. The curve has been extrapolated in dashes to 150 kG.

A lens of the same construction, veteran of 10^7 pulses near 100 kG, was run at 99, 124, 144 and 164 kG using a pulse transformer of higher efficiency connected directly to the power supply. The lens ran for hundreds of pulses at 144 kG (180 kA) but failed after about 50 pulses at 164 kG (205 kA). The failure mode was crack-like cupture of the inner titanium tube about midway between the ends. In earlier experience cracks in the middle have been associated with over-heating and breaks of the welds at the outer ends of the titanium tubes have been associated with field produced mechanical stress. Because the repetition rate of .3 Hz is so low, however, the cause of failure is surely mechanical stress. It appears that the ends are sufficiently strong in the present design that they are not necessarily the weak point. Although one example is only suggestive, it seems possible to subject lenses of the current design to 145-150 kG service. Thus, such a lens could probably serve in the antiproton source without modification. However, a more conservative design

is being built. A 10 cm long version with 1 mm thick wall in place of the .7 mm wall is now in fabrication. A version 12 cm long will follow shortly if there are no problems. The 10 cm long version uses all the parts of the old lens except the inner titanium tube.[5]

When the crowbar ignitron in the pulsed power supply (V2, Figure 4) is not triggered, the pulse switch V1 will conduct in the reverse direction. Although this operation mode shortens the ignitron service life and increases the energy dissipated in the lens, it is useful for measuring the effective inductance and resistance appearing in the primary circuit of T1. This circuit is a series LRC circuit where the "C" is the energy storage capacitor C1 and L and R vary depending on whether the whole circuit appears in the secondary load or a shorting bar is used to isolate part of it. By moving the shorting bar to several places the inductance and resistance of parts of the circuit can be inferred. The impedances appearing in the primary circuit must simply be corrected by the squares of the transformer ratios. For the air-insulated transformer the current ratio used is the one measured at the excitation used in the inductance-resistance measurements. The measurements are made by recording the oscillatory waveform from the primary circuit current pickup on a storage scope and finding the oscillation period and amplitude decrement. The quantities taken from the oscillogram were the half period given by the time difference $\frac{\tau}{2} = t_- - t_+$ between the first current maximum and the first minimum and the ratio I_-/I_+ of the current at the minimum to the current at the maximum (see Figure 7). The angular frequency of the damped oscillation is

$$\omega = \pi/(t_- - t_+)$$

and the damping factor is $e^{-\delta t}$ where

$$\delta = \ln(I_-/I_+)/(t_+ - t_-) = R/2L$$

The damped frequency is related to the frequency ω_o of the circuit with R = 0 by

$$\omega_o^2 = \omega^2 + \delta^2$$

so that one finds L from

$$L = (\omega_o^2 C)^{-1}$$

and R from

$$R = 2L\delta$$

Measurements of this kind were made for three circuits: (a) normal circuit with lens, (b) circuit with shorting bar directly across current feed to the lens, (c) circuit with a shorting bar across the primary of the air ensulated transformer T3. The measured values and computed quantities for these cases are given in Table III. Shorting out the lens reduces the inductance seen in the primary circuit by 1.78 μH. Applying the measured transformer ratios one finds 4.94 x 10^{-8} H for the inductance of the lens. The overall efficiency of the test setup is given by the fraction of the load inductance attributable to the lens, viz, 1.78 μH/3.84 μH = 46%. The measurement with the air transformer primary shorted shows that about half of the parasitic inductance results from that transformer and half results from all other sources. The ratio of the load inductance of the lens to the sum of lens and air transformer load inductance is 1.78 μH/2.82 μH = 63%; this figure checks the 64% efficiency of the air transformer as measured by the current ratio for the same excitation V_C = 4 kV (see Table II).

The resistance values do not lend themselves to such a consistent interpretation. The larger resistance measured with the lens shorted out implies

a measurement error or a high resistance contact for the shorting bar. One can conclude that the load resistance is of order $5 \times 10^{-2}\Omega$ and that about half is in the lens or air transformer. The comparison of the current in the primary to the capacitor voltage V_C gives a magnitude of the impedance as .22 to .23Ω. From

$$R = \sqrt{|Z^2| - \omega^2 L^2} \approx \sqrt{.22^2 - (5.1\times10^4 \times 3.8\times10^{-6})^2} = .1\,\Omega$$

where $|Z|$ is the magnitude of the primary circuit impedance and L is the load inductance, one finds the resistance of the same order. The load resistance is, therefore, a significant but not dominant part of the load impedance. The resistance of the lens itself can be estimated at $\sim 7 \times 10^{-4}\Omega$ which would look like $\sim 2.5 \times 10^{-2}\Omega$ in the primary. Thus various resistances in the circuit limit the current to from three quarters to one half of what would be obtained in a pure LC circuit. Despite the small resistance of the lens it varies sufficiently with temperature to have a noticeable effect on the timing. Therefore timing adjustment may be needed occasionally as the system is brought into operation from a cold start.

The quoted resistance for the lens implies a per pulse heating of

$$Q_p = \frac{1}{2} I_{max}^2 R_{Lens}\, \tau/2 \sim 840\,J$$

which can raise the $\sim$4 ml water in the lens by no more than $\Delta T_p \sim 50^0$C at maximum excitation $I_{max} \approx 2 \times 10^5$ A.

At an excitation of 2×10^5 A the peak voltage drop across the lens is

$$\Delta V = I_{max}\, \omega L_{Lens} = 2\times10^5 \times 5.1\times10^4 \times 5\times10^{-8} = 510\,V.$$

This potential appears therefore also between the secondary and primary of the air-insulated transformer. The breakdown voltage of the air insulation was mea-

sured in a static condition by draining the cooling water from the lens and connecting the DC high voltage directly to the secondary. The measured static breakdown voltage was 2 kV. At the frequencies present in this system the static breakdown voltage should be a good measure of the insulation.

The mechanical checks on the system consisted basically of looking for changes in the electrical parameters associated with various mechanical actions on the system and an evaluation of the cooling circuit by static pressure test, introduction of pressure transients, flow measurements, etc. An important aspect of these tests was to note any properties of the system which would affect its reliability in routine operation or its suitability for repair or replacement by a remotely controlled manipulator.

The attempt to find a mechanical influence on electrical properties can be summarized in the statement that no action that seemed reasonable to administer produced observable effects on electrical parameters. In the following discussion of what was done there are a few qualitative observations bearing on suitability and reliability for a permanent installation.

The assembly consisting of the lens and the secondary of the air-insulated transformer was driven in and out of mesh with the primary several times using the motor driven horizontal screw. This motion is the one used to replace one lens by a preinstalled spare with less than a one minute interruption. The position determined by the limit microswitches was quite reproducible. There was no sign of binding or vibration in the motion. A long test was not made because, for one reason, this would almost surely have been only a life test for the motor. Because this motor is not radiation hard it will have to be replaced by a pneumatic, hydraulic, or remote electrical motor. The limit switches also are not likely to survive very high radiation and a magnetically actuated glass encapsulated reed switch has been developed to replace them.

There is no position readout installed for remote precision alignment, but a slide wire, for example, could be installed easily.

Several trials were likewise made of unlocking the secondary from the positioning frame and withdrawing it vertically as one would do to replace a defective lens. There was no significant change in position or in the primary-to-secondary insulating gap. Because one expects to perform these operations with a remote manipulator special attention was given to the need for complex motions or motions which differed from trial-to-trial. Two minor problems of this kind were noted, both amenable to simple correction. The shaft for the two cams that drive the wedges locking the secondary onto the positioning pins on the frame is free to rotate more than the 180^{0} needed to complete the withdrawal of the wedges. Therefore, until a stop is installed on the shaft one has to turn exactly the correct amount by observing the travel of the locking wedges. All that is required to make this operation simple is a limit pin in the shaft to stop the motion at the point of furthest withdrawal. Probably equally simple to correct is the tendency of the secondary to bind on the tight fitting positioning pins thereby necessitating a slight twisting motion or an appreciable upward jerk to free it. An inconsequential sacrifice in the precision of the fit is probably all that is required to fix the problem if indeed it is really necessary. Even a little lubrication makes a difference.

To check for weak parts, insecure connections, or intrinsic susceptibility to impact or vibration the transformer base plate, transformer, and lens were hit repeatedly with a wooden mallet during .3 Hz operation at 110 kG. The force of the blows was not calibrated except to ascertain that it was more than likely in routine service. No problems were uncovered although, of course, a direct blow to the ceramic insulators in the cooling circuit would doubtless produce a noticeable effect.

An area of concern for a beam line component which is to be largely inaccessible in a high radiation area is the durability of its water system. When the air-insulated transformer secondary is lifted from the positioning frame, lead compression seals for the inlet and outlet are separated. The seals are made by 2 mm thick lead washers which are compressed between tapered nipples of 5 mm and 6 mm diameter. The bearing edges of the nipples are sharpened to a wedge shape, and compression of about 20 kg is maintained by a spring. These seals can be remade a few times ($\sim$10) without changing the lead washers, but in an operational situation a new one would be installed and tested after each separation. The circulating system used in the tests consists of an atmospheric pressure reservoir of low conductivity water with a small pump that generates a flow $\sim$3 1/min at a pump pressure of 3 atm. These figures include significant drops in the supply and return tubes. Because the lens capacity is only 4 ml there are several complete changes of water between each pulse of the lens. By blocking the exit tube a static pressure of about 3.8 atm was achieved. With this gentle system it was not possible to generate very severe transients. The seals, bellows, etc., had no difficulty with the static pressure nor with repeated transients between 3.8 atm and 3 atm produced by rapidly closing and opening the exit.

In an installation at Fermilab it could be desirable to run the two lithium lenses, the target, and the 50 kG pulsed magnet in a series loop. In such a loop one might want a system pressure $\sim$10 atm. No circulating water was available at this pressure, but a static pressure test was made to twelve atmospheres using a portable water hydraulic system. There was no leaking at this pressure, but it was not attractive to go higher because the bellows in the lens system are rated about 16 atm. It did not seem worthwhile to induce a failure deliberately for the sake of testing published specifications on the bellows. If

system pressures higher than 200 psi are needed the bellows should be replaced by something more robust. The test was made primarily because of concern about the lead compression reals.

These tests and the earlier life test of the proton beam lens demonstrate that it is both durable and reliable. It would be very useful and interesting to start beam tests at the earliest possible time not only to further test its properties but also to use it for getting very small beam size to confront the probelms of target design.

Acknowledgement

The authors are grateful to mechanical technicians Fedor Kozhevnikov and Viktor Strelnikov for the their meticulous work which was of central importance in the success of the lithium lens development.

Table I: Ignitron Specifications

	Minimum	Maximum
Anode potential (kV)	.1	20
Anode current, peak (kA)		100
Anode current delay (μs) (w/firing pulse)		1
Anode current time jitter (μs)		.2
Anode current rate of rise (kA/μs)		10
Repetition rate (Hz)		.17
Firing potential (V)	2000	3000
Firing pulse current (A)	200	300
Control electrode negative potential (V)		5
Firing pulse rate of rise (kV/μs)	5	7
Firing pulse length (μs)	10	
Water temperature, input (^{o}C)	5	35
Water flow (1/min)	1	
Service life (pulses)		
100 kA	10^4	
50 kA	2×10^4	
20 kA		10^6

Table II: Measured Current Ratios

A. Lithium Lens Load

Vc (kV)	T1	T2	T3	T1·T2·T3
1	.250	6.33	3.91	6.19
2	.243	6.13	4.11	6.12
3	.242	6.17	4.00	5.97
4	.245	6.06	3.82	5.67
5	.251	5.95	3.66	5.47
6	.246	5.95	3.44	5.04
7	.226	6.10	3.28	4.52

B. Equivalent Load

1	.262	5.00	3.98	5.21
2	.249	5.75	4.04	5.79
3	.258	5.78	3.96	5.90
4	.248	6.15	3.51	5.36
5	.249	6.20	3.20	4.93
6	.251	5.83	3.21	4.69
7	.232	6.08	3.02	4.26

C. Turns Ratio

	.250	6.00	6.00	9.00

Table III: Load Impedance Measurements

	Complete System	T3 Secondary Shorted	T3 Primary Shorted
$\tau/2$, half period (μs)	62	46	32
$\lvert I_+/I_- \rvert$, current decrement ratio	.70	.53	.63
L, load inductance (μH)	3.84	2.06	1.02
R, load resistance (mΩ)	44.2	56.9	29.3

Table IV: Design Parameters and Measured Properties of Lithium Lens

Maximum field, B_{max}	100 kG
Length,	10 cm
Radius, R_o	2.5 mm
Maximum current, I_{max}	120 kA
Current pulse width,	60 μs
Repetition rate	13 Hz
Inductance, L	5×10^{-8} H
Resistance, R	$7 \times 10^{-3}\,\Omega$
Thickness inner Ti wall,	0.7 mm
Temperature drop across Ti wall,	150°C
Average operating temperature, T_{AV}	170°C
Cooling water capacity	4 mℓ
Cooling water flow	5 ℓ/min
Water pressure differential	4 atm
Maximum water pressure, static	12 atm
Temperature drop between Ti and water	20°C
Service life	10^{7}
Maximum field at 5.0 Hz	120 kG
Maximum field sustainable (0.5 Hz oper)	145 kG

References

1. B. F. Bayanov, et al., Tenth Int'l. Conf. on High Energy Accel, Protvino (1977), V. II, p. 103.

2. B. F. Bayanov, et al., Eleventh Int'l. Conf. on High Energy Accel, Geneva (1980), to be published and G. S. Villevald, et al., ZhTF, V. XLVIII (1978), p. 566.

3. T. A. Vsevolozkskaya, et al., ZhTF, V. XLV (1975), p. 2494.

4. D. Cline, et al., Proposal for Fermilab Expt 492 (1976).

5. J. A. MacLachlan, Report on High Field Performance of a Modified Proton Beam Lithium Lens, Fermilab TM 1001 (in preparation).

6. B. F. Bayanov, et al., ZhTF, V. XLVIII (1978), p. 160.

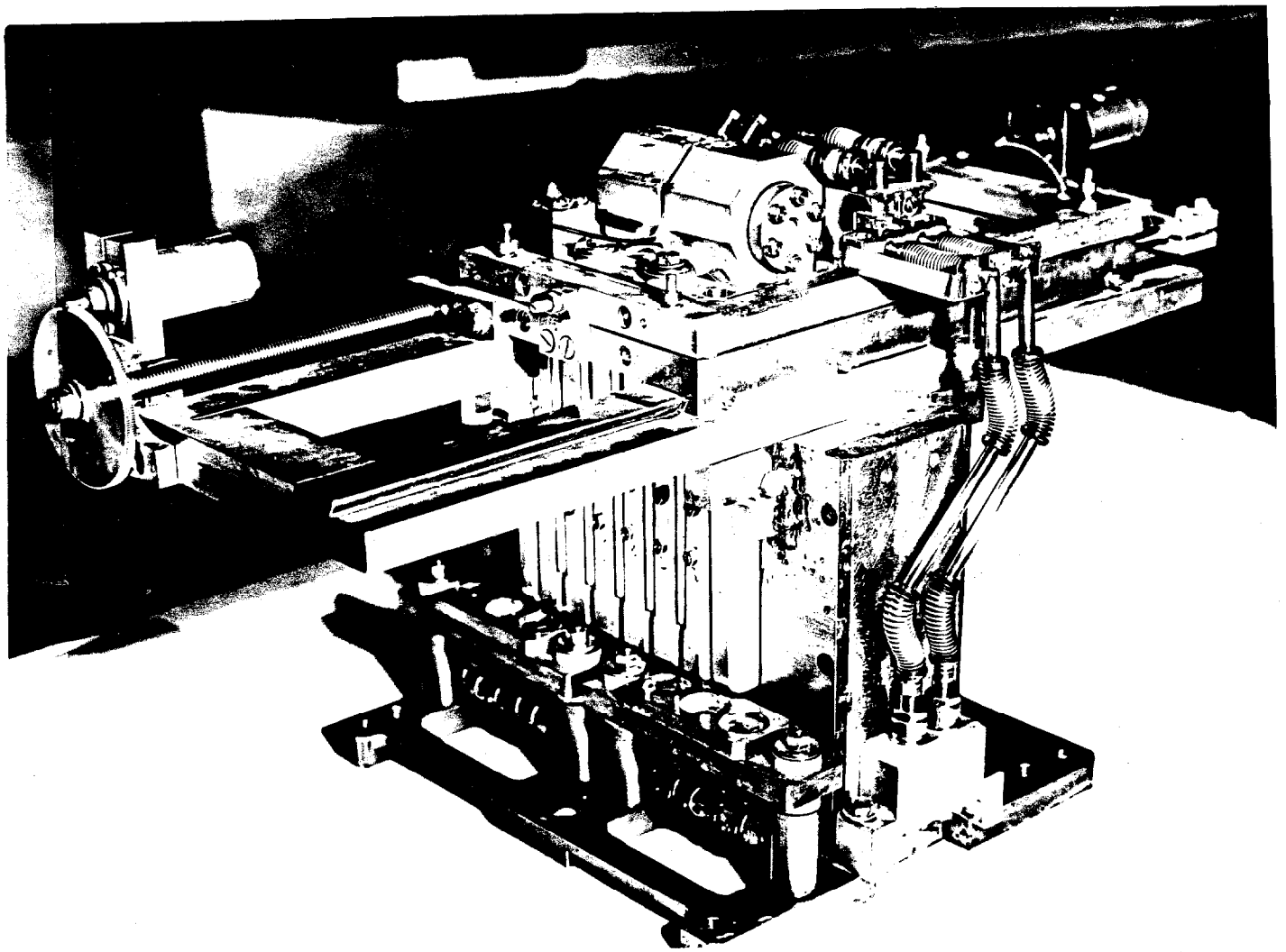

Figure 1: Proton beam lithium lens, air-insulated pulse transformer and positioning frame.

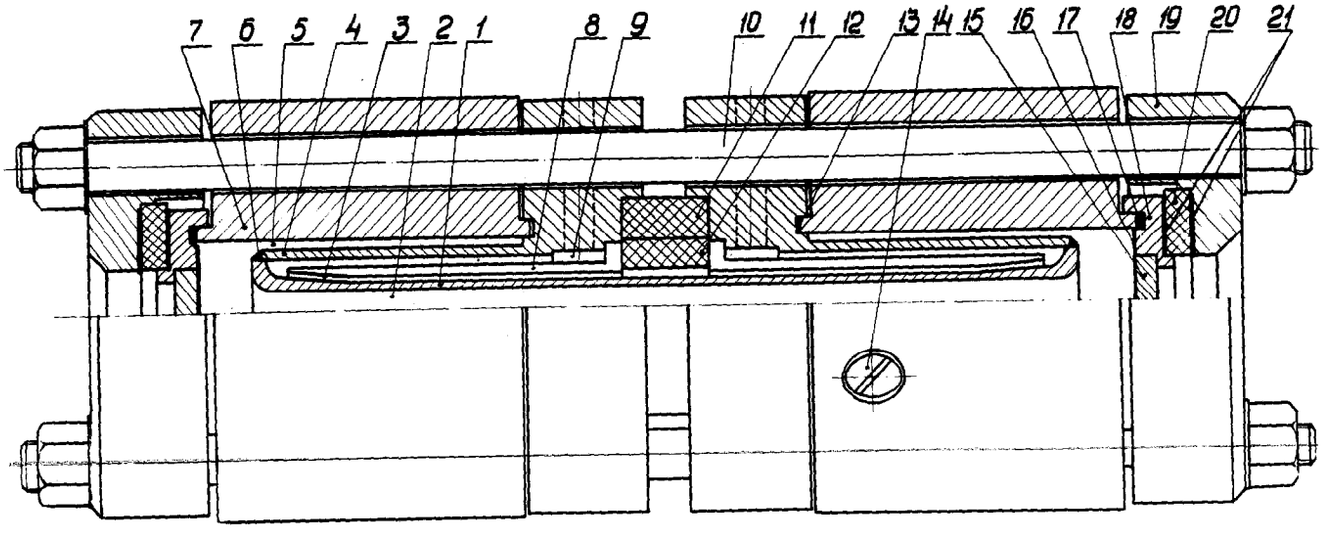

Figure 2: Longitudinal cross section of the lithium lens.

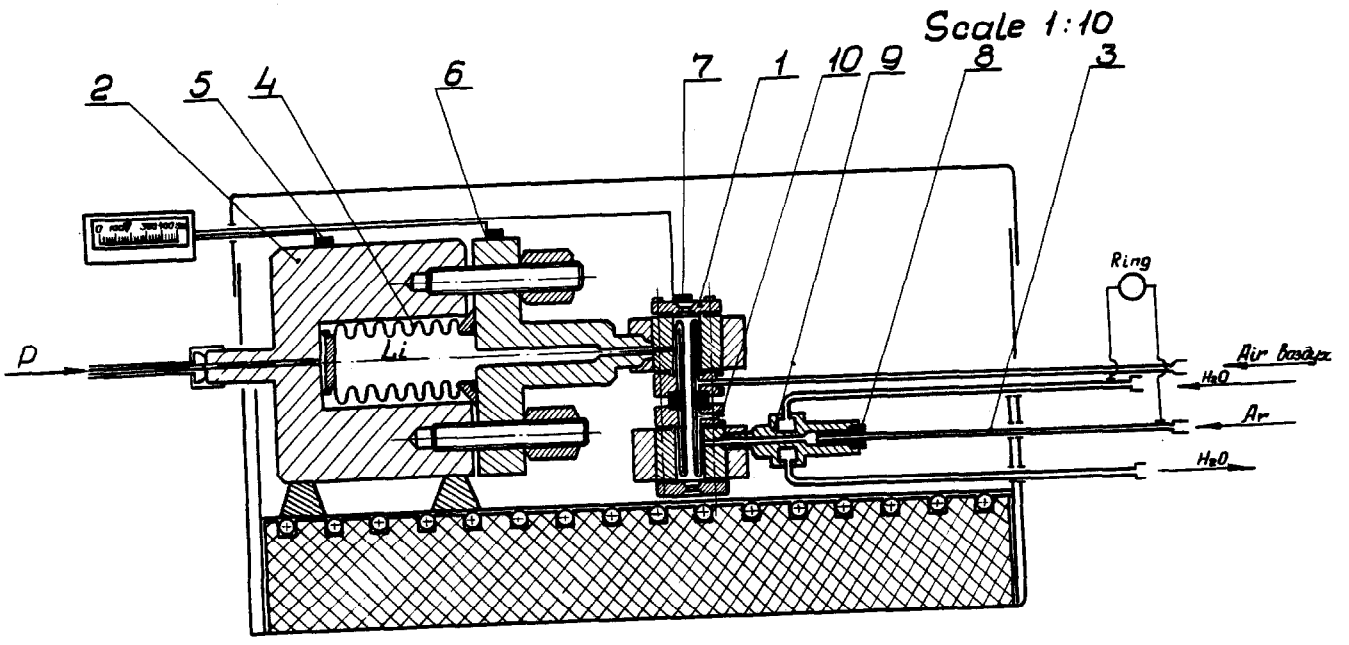

Figure 3: Scheme for filling the lens structure with lithium.

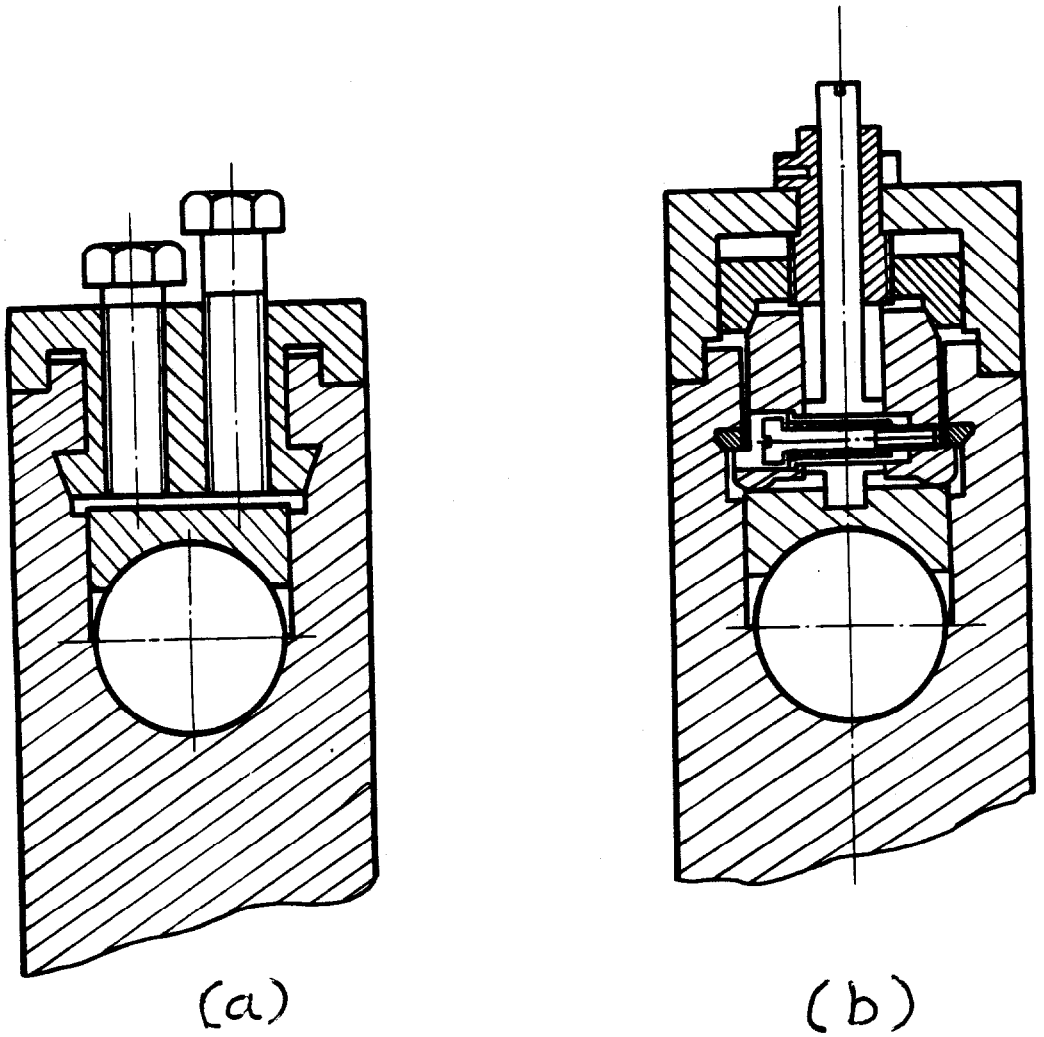

Figure 4: Development of current contact with removable top (a) test version, (b) hydraulically actuated version for easy removal.

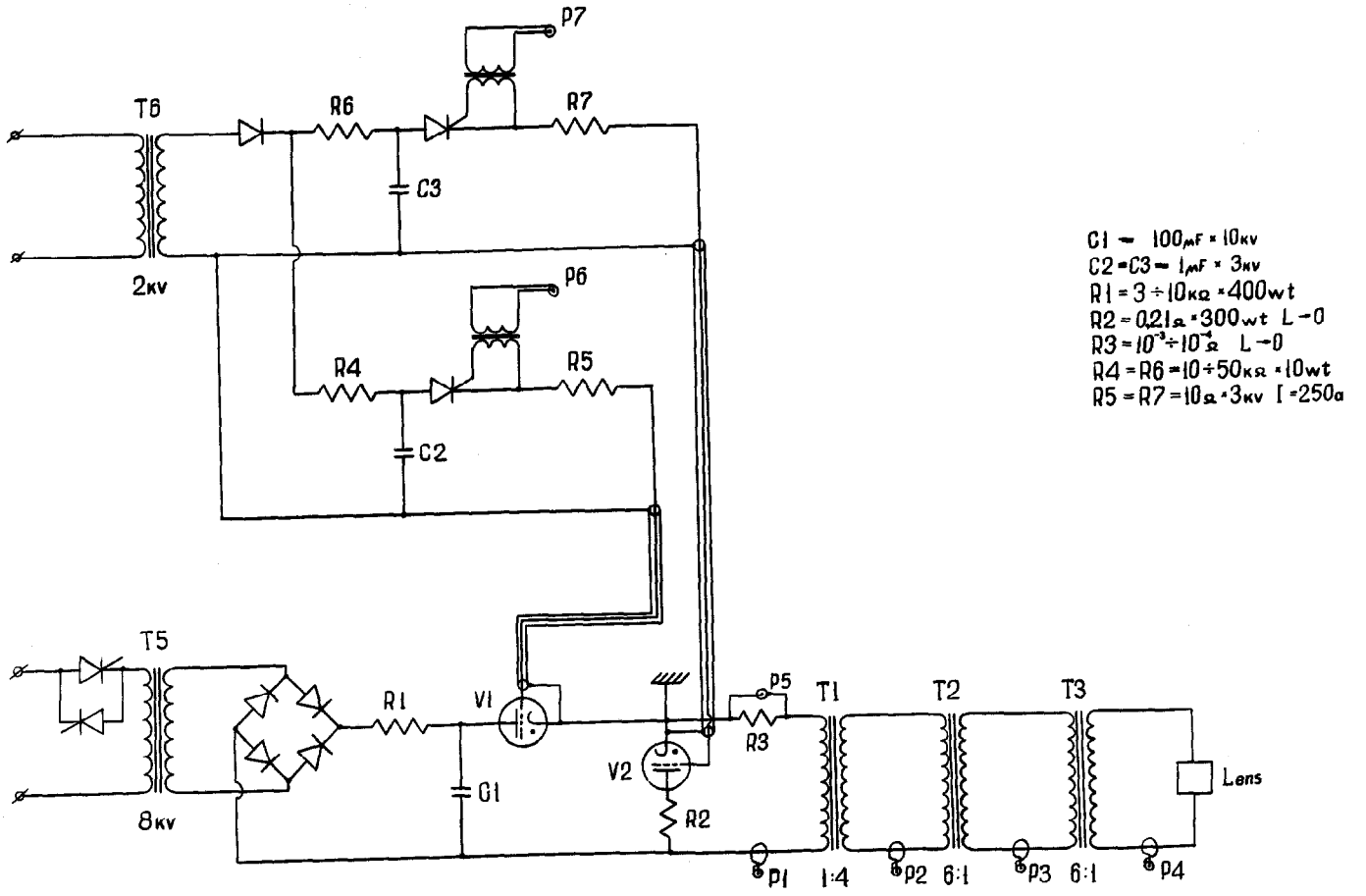

Figure 5: High voltage power supply circuit.

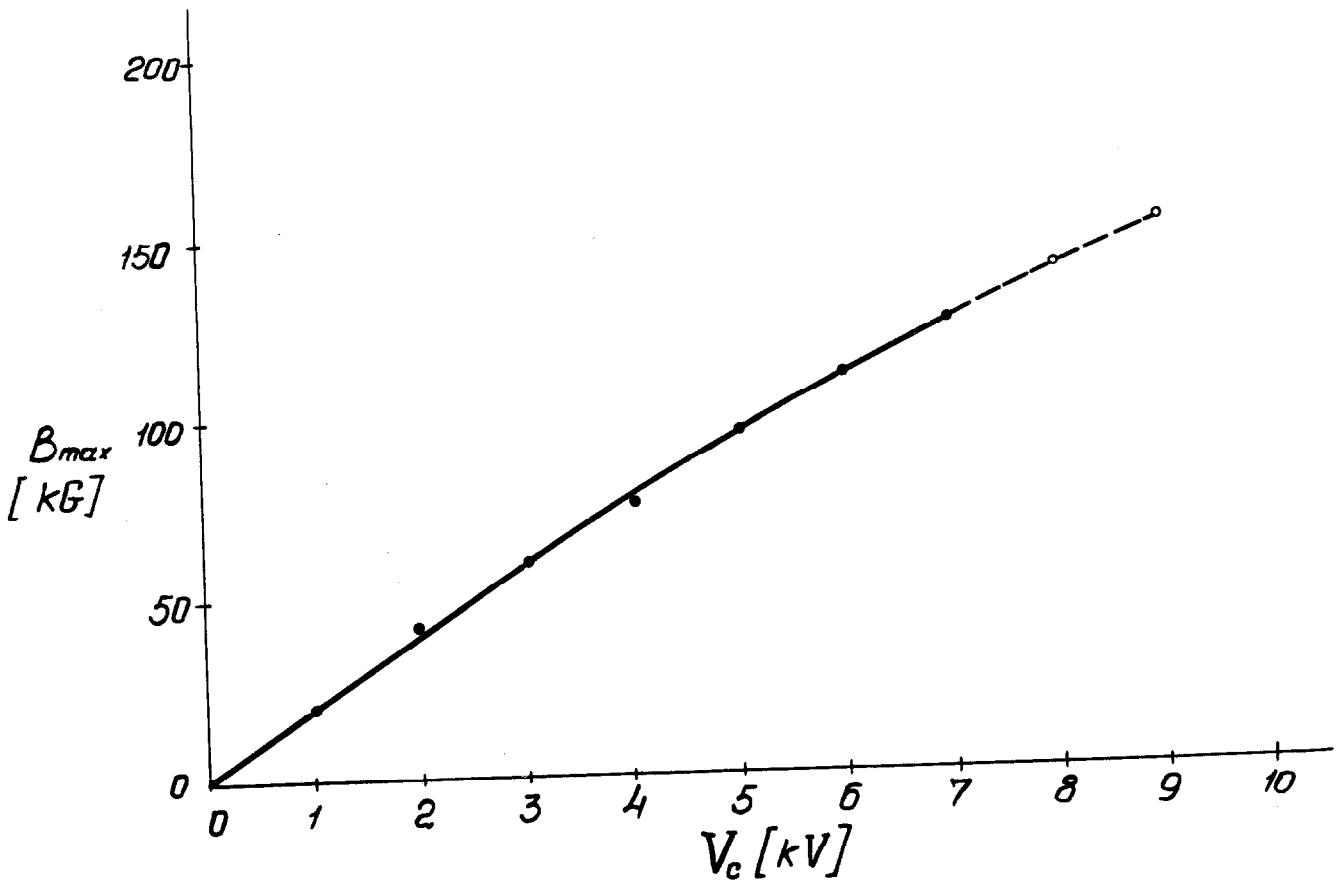

Figure 6: Excitation curve.

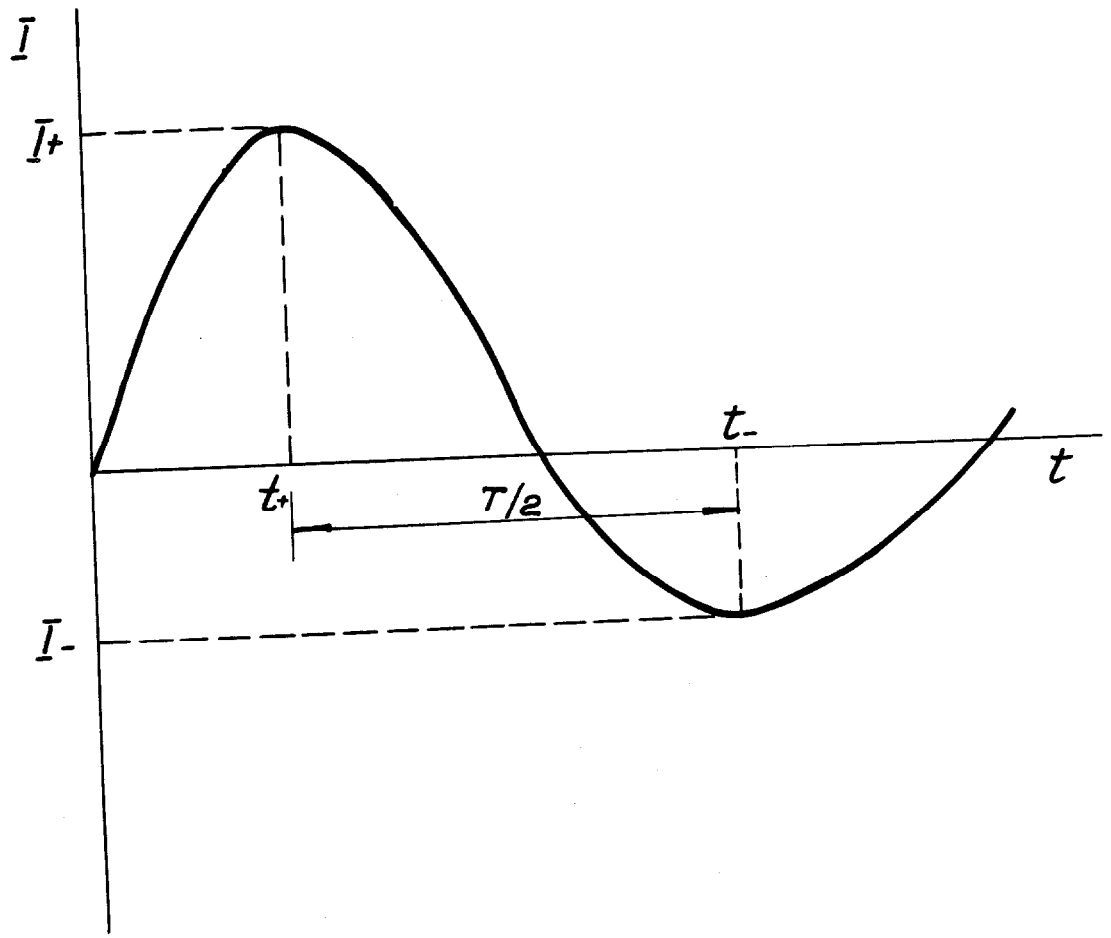

Figure 7: Oscillatory current in the high voltage supply for the lens when the crowbar is not used.