Fermilab

TM-967
1650

CENTRAL: A COMPUTER PROGRAM TO DO PERFORMANCE CALCULATIONS FOR A HELIUM LIQUEFIER

Henry Barton

May 19, 1980

ABSTRACT

The flow diagram for a helium liquefier is shown in Figure 1. The computer program described here thoroughly analyzes the operating cycle of the liquefier and predicts the values of the plant thermodynamic variables at all process points in the plant. The performance characteristics of the turboexpanders are calculated. The temperature distributions within the heat exchangers are checked for unphysical behavior. These calculations require 1.0 second of computer time and the results are immediately available in case real-time response is desired.

PROGRAM DESCRIPTION

The process points shown in Figure 1 are numbered to correspond to process instrumentation in the liquefier control room so that comparisons can be readily made without difficulty. The layout of the operators console is shown in Figure 2. Temperature, pressure and flow measurements are available to the operator of the plant. Enthalpy measurements are not made. No measure of turbine performance is available to the operator except for speed of rotation.

The heat exchangers are designated HX1 through HX8, beginning with the liquid nitrogen exchanger. These heat exchangers are grouped into four modules designated E16 through E19. Intermediate points within these modules are not instrumented although a complete analysis of the heat exchanger performance is performed by the program. The heat leak into each heat exchanger has been fully accounted for in the program at the correct temperature level.

The basis for the design of the plant is the TS diagram shown in Figure 3. A number is indicated in a circle for each process point on this diagram. The program supplies all the information shown on Figure 3 for any desired plant operating condition which is physically realizable.

The computer output is included in Figures 4 through 13. The program can be used interactively and contains initial set-point values to produce the operating conditions of Figures 3 and 4.

You should be aware that these calculations are made using several approximations which do not affect the results.

1. The pressure drop in the high-, medium- and low-pressure sides of the liquefier is introduced by summing discreet changes in pressure. Typical constant values for these changes have been included in the program.

2. The pressure PT17 is a parameter specified by the user. The value is used for the cold-end calculations regardless of the pressure in the low-pressure side.

3. In operation a total of approximately 1.0g/s of helium flows out of the process through the labyrinth seals of the turbo-expanders. The program neglects this flow which amounts to 0.07% of compressor discharge.

4. The program calculates the compressor work using an isothermal compression corrected by a compressor efficiency specified by the user.

PROGRAM VALIDATION

Naturally, some real-world test of the computer predictions is desirable. Because the performance of a liquefier of this type is highly constrained by the thermophysical properties of the process fluid, calculations of this type can be accurate and of value in identifying unphysical operating conditions. Program output for two known operating modes has been compared with the expected values.

First, the design TS diagram for the plant (Figure 3) is very closely reproduced by the program. The computed temperatures (Figure 4) agree to better than 0.1°K. This accuracy is good enough for operation of the liquefier. The mass flow predictions agree to a fraction of a percent.

The steady state characteristics of the heat exchangers are given in Figures 5 through 11. The minimum size of each heat exchanger has been calculated for the operating conditions corresponding to maximum liquefaction of the plant.

A second test of the program is shown in Figure 14. This TS diagram was computed by the program and corresponds to an entirely different operating mode of the plant; i.e., turbine T2 stopped. Information about this mode has been supplied by Sulzer and agrees with Figure 14 to about 1% of the helium flow. Notice that TT15 must be raised to operate HX7 and HX8. This requires the larger flow FT5 corresponding to the higher enthalpy at point 17.

SAMPLE RESULTS

The first sample of output from the program is Figure 15. This corresponds to making 4000 liters per hour with the plant while operating the compressors at the reduced discharge pressure of 125 psi. Notice that all of the temperatures on the low side

must be adjusted by approximately 1°K to produce the peak liquefaction. Nearly every heat exchanger is affected by these temperature changes. Liquid nitrogen flow is reduced 17% to control these temperatures. In addition, the flow through the turbines is increased by 8% above the nominal value.

A second sample is given in Figure 16 where the plant is being operated as an 8.0 kilowatt refrigerator. The work done by the turbines is greatly reduced. Otherwise, the temperatures in the plant were kept nearly unchanged by reducing liquid nitrogen consumption to 155g/s. Unchanged turbine efficiencies were assumed.

SUMMARY

The operating conditions predicted by the program CENTRAL are in good agreement with the currently available operating parameters for the liquefier. The program is a useful aid to study the performance of the liquefier and to analyze the operating conditions. The calculations are performed very rapidly so that instantaneous response is possible. The program could be used to train plant operators or as a diagnostic tool during plant operation. The program CENTRAL is approximately 2000 FORTRAN statements including comments.

FERMILAB

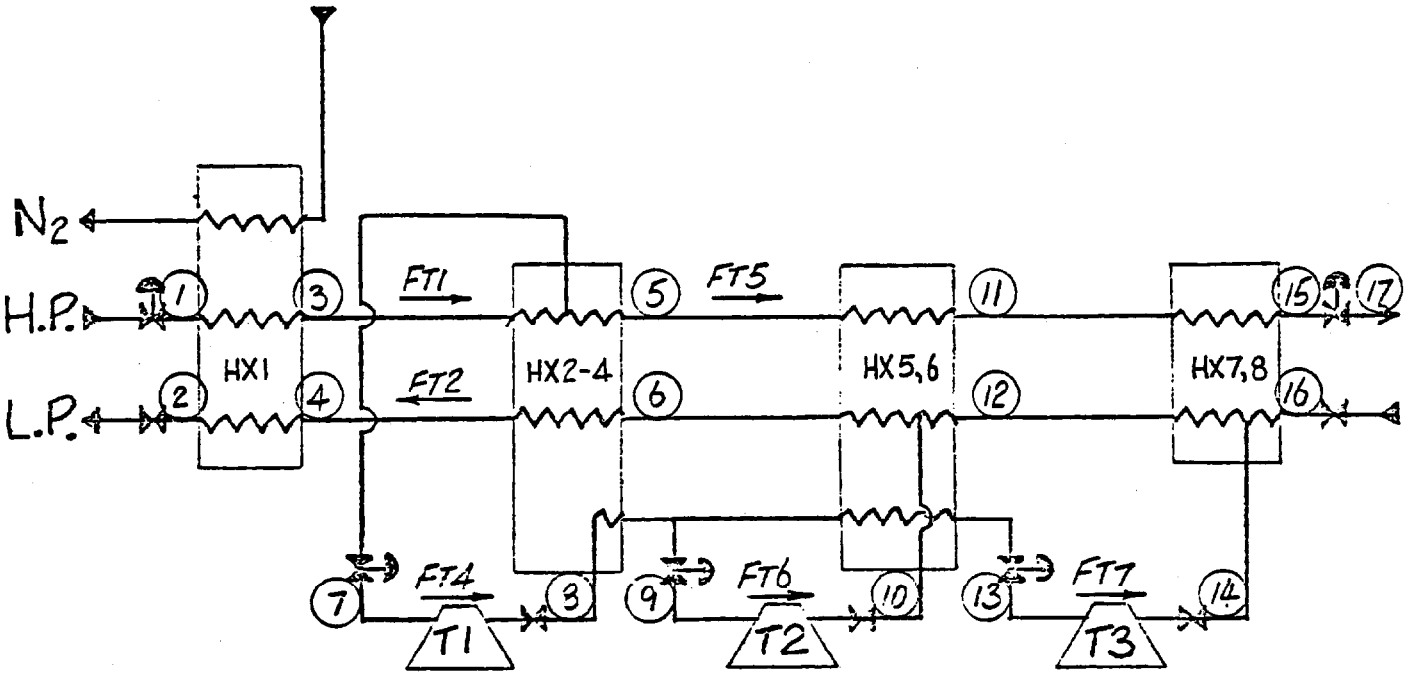

Figure 1.

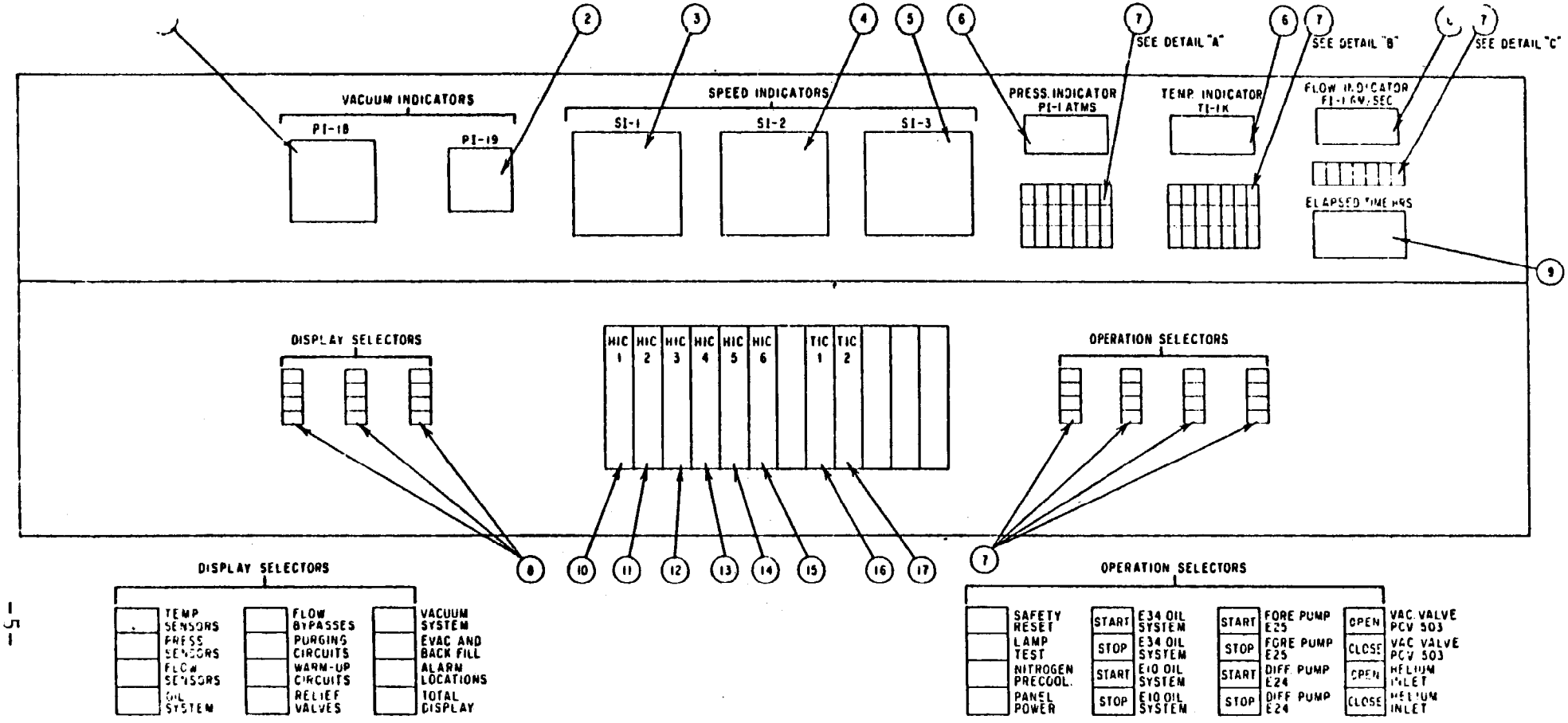

ITEM NO	DESCRIPTION	DESIGNATION
1	COLD CATHODE ION GAUGE CONTROL	PI 18
2	T/C VACUUM GAUGE CONTROLLER	PI 19
3	SPEED INDICATOR	SI 1
4	SPEED INDICATOR	SI 2
5	SPEED INDICATOR	SI 3
6	DIGITAL METER	
7	SWITCHCRAFT SWITCH ASSEMBLY	
8	SWITCHCRAFT INDICATORS	
9	ELAPSED TIME (HOURS)	
10	HAND INDICATING CONTROLLER	HIC 1
11	HAND INDICATING CONTROLLER	HIC 2
12	HAND INDICATING CONTROLLER	HIC 3
13	HAND INDICATING CONTROLLER	HIC 4
14	HAND INDICATING CONTROLLER	HIC 5
15	HAND INDICATING CONTROLLER	HIC 6
16	TEMPERATURE INDICATING CONTROLLER	TIC 1
17	TEMPERATURE INDICATING CONTROLLER	TIC 2

PT 1	PT 2	PT 3	PT 4	PT 5	PT 6	PT 7
PT 8	PT 9	PT 10	PT 11	PT 12	PT 13	PT 14
PT 15	PT 16	PT 17	PT 18			

DETAIL "A"

TT 1	TT 2	TT 3	TT 4	TT 5	TT 6	TT 7
TT 8	TT 9	TT 10	TT 11	TT 12	TT 13	TT 14
TT 15	TT 16	TT 17	TT 18	TT 19		

DETAIL "B"

FT 1	FT 2	FT 3	FT 4	FT 5	FT 6	

DETAIL "C"

CONTROL CONSOLE (FRONT PANEL)

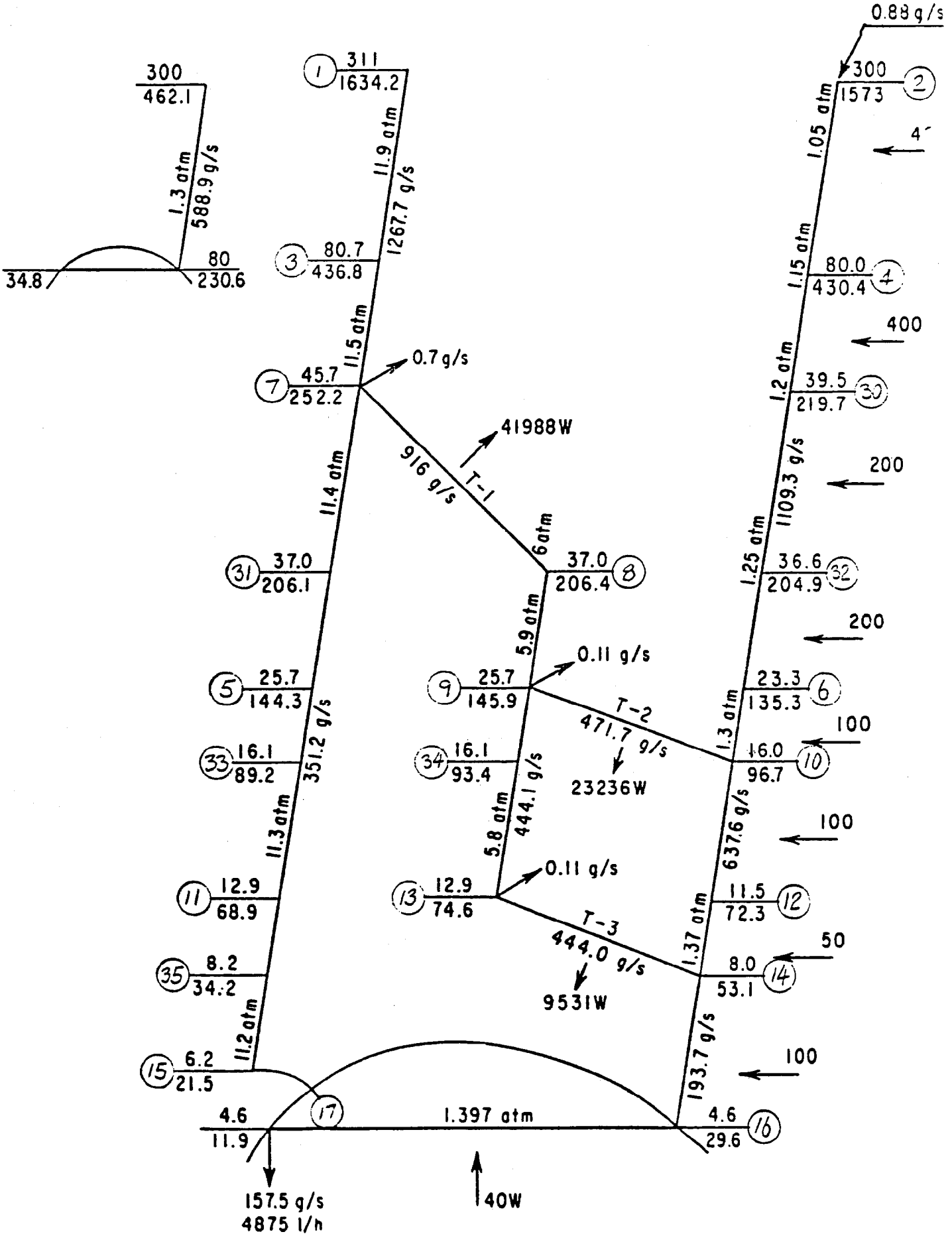
0.88 g/s
300
462.1
1.3 atm
588.9 g/s
80
230.6
34.8
1
311
1634.2
11.9 atm
1267.7 g/s
3
80.7
436.8
11.5 atm
0.7 g/s
7
45.7
252.2
41988W
916 g/s
T-1
11.4 atm
6 atm
31
37.0
206.1
37.0
206.4
8
5.9 atm
0.11 g/s
5
25.7
144.3
9
25.7
145.9
T-2
471.7 g/s
23236W
351.2 g/s
33
16.1
89.2
34
16.1
93.4
5.8 atm
444.1 g/s
11.3 atm
0.11 g/s
11
12.9
68.9
13
12.9
74.6
T-3
444.0 g/s
9531W
35
8.2
34.2
11.2 atm
15
6.2
21.5
17
4.6
11.9
1.397 atm
157.5 g/s
4875 l/h
40W
2
300
1573
1.05 atm
4
1.15 atm
80.0
430.4
4
400
1.2 atm
39.5
219.7
30
200
1109.3 g/s
1.25 atm
36.6
204.9
32
200
6
23.3
135.3
1.3 atm
100
10
16.0
96.7
637.6 g/s
100
12
11.5
72.3
1.37 atm
50
14
8.0
53.1
193.7 g/s
100
16
4.6
29.6

Figure 3.

CALCULATED SYSTEM DATA

PLANT CAPACITY-LITERS/HR
4865.682

FRACTION LIQUEFIED
.453

REFRIGERATION LOADS-WATTS

Q1	Q2	Q3	Q4	Q5	Q6	Q7	Q8
400.000	400.000	200.000	200.000	100.000	100.000	50.000	100.000

QLOAD
40.000

MASS FLOW-GM/SEC

FT1	FT2	FT4	FT5	FT6	FT7	FLIQ	FLN2
1266.634	1109.134	913.840	352.793	479.659	443.182	157.500	584.737

WORK-WATTS
WCOMP
2644172.13

COMPRESSOR HORSEPOWER
3544.467

CALCULATED FLUID PROPERTIES FOR SYSTEM

PRESSURE (ATM), TEMPERATURE (DEGREE K) AND ENTHALPY (J/GM)

POINT	1	2	3	4	5	6	7	8	9	10
PRESS	11.90	1.05	11.50	1.15	11.30	1.30	11.40	6.00	5.90	1.30
TEMP	311.00	300.00	80.70	80.00	25.65	23.33	45.66	37.00	25.65	16.00
ENTHALPY	1633.7	1572.5	436.3	430.4	144.2	135.3	252.2	206.4	145.0	56.6

POINT	11	12	13	14	15	16	17	17L	17V
PRESS	11.30	1.30	5.80	1.37	11.20	1.40	1.40	1.40	1.40
TEMP	12.89	11.46	12.89	8.00	6.16	4.59	4.57	4.50	4.50
ENTHALPY	69.0	72.4	74.6	53.1	21.6	29.6	21.6	11.8	29.6

POINT	30	31	32	33	34	35
PRESS	1.20	11.40	1.25	11.30	5.90	11.30
TEMP	39.50	37.00	36.65	16.10	16.10	8.22
ENTHALPY	219.8	206.0	204.0	85.1	93.2	34.3

Figure 4.

COOLING CURVE FOR HX2

HEAT TFR 1 TO 2	TEMP DIFF 1 TO 2	TEMP 1 HI PRESS	TEMP 2 LOW PRESS	ENTHALPY HI PRESS	ENTHALPY LOW PRESS	SUMMED UA
0.00	.71	80.71	80.01	436.25	430.37	0.00
7772.96	.98	79.54	78.65	430.12	423.34	9815.50
15545.91	1.06	78.36	77.30	423.98	416.32	17841.40
23318.87	1.24	77.19	75.95	417.84	409.30	24620.60
31091.82	1.41	76.01	74.60	411.71	402.28	30510.30
38864.78	1.59	74.84	73.25	405.57	395.26	35607.05
46637.73	1.77	73.67	71.90	399.43	388.24	40335.67
54410.69	1.94	72.49	70.55	393.30	381.22	44520.50
62183.64	2.12	71.32	69.20	387.16	374.20	48358.59
69956.60	2.30	70.15	67.85	381.02	367.18	51978.60
77729.56	2.48	68.97	66.50	374.89	360.16	55135.74
85502.51	2.65	67.80	65.15	368.75	353.14	58166.47
93275.47	2.83	66.63	63.80	362.61	346.12	60999.81
101048.42	3.01	65.46	62.45	356.48	339.10	63650.50
108821.38	3.19	64.29	61.09	350.34	332.08	66165.56
116594.33	3.37	63.12	59.74	344.20	325.06	68534.26
124367.29	3.55	61.95	58.39	338.07	318.04	70779.70
132140.24	3.73	60.78	57.04	331.93	311.02	72913.91
139913.20	3.91	59.61	55.69	325.79	304.00	74946.90
147686.16	4.10	58.44	54.34	319.66	296.98	76887.83
155459.11	4.28	57.27	52.99	313.52	289.96	78744.30
163232.07	4.46	56.11	51.64	307.38	282.94	80523.30
171005.02	4.64	54.94	50.29	301.25	275.92	82230.85
178777.98	4.83	53.77	48.95	295.11	268.90	83872.08
186550.93	5.01	52.61	47.60	288.97	261.88	85451.93
194323.89	5.20	51.45	46.25	282.84	254.86	86974.33
202096.84	5.38	50.28	44.90	276.70	247.84	88443.38
209869.80	5.57	49.12	43.55	270.56	240.82	89862.42
217642.76	5.76	47.96	42.20	264.43	233.80	91234.55
225415.71	5.95	46.80	40.85	258.29	226.78	92562.55
233188.67	6.14	45.64	39.50	252.15	219.76	93848.00

REQUIRED UA (WATTS/K) = 93848.0
AVERAGE LMDT (K) = 2.485
REQUIRED NTU = 16.3

Figure 5.

COOLING CURVE FOR HX3

HEAT TFR 1 TO 2	TEMP DIFF 1 TO 2	TEMP 1 HI PRESS	TEMP 2 LOW PRESS	ENTHALPY HI PRESS	ENTHALPY LOW PRESS	SUMMED UA
0.00	6.14	45.64	39.50	252.15	219.76	0.00
542.63	5.94	45.35	39.41	250.61	219.27	80.96
1085.27	5.75	45.06	39.31	249.08	218.77	182.71
1627.90	5.55	44.77	39.22	247.54	218.27	278.77
2170.53	5.36	44.48	39.12	246.00	217.78	378.26
2713.17	5.16	44.19	39.03	244.46	217.28	481.44
3255.80	4.97	43.90	38.93	242.92	216.79	588.50
3798.43	4.77	43.61	38.84	241.39	216.29	700.01
4341.07	4.58	43.32	38.74	239.85	215.80	816.08
4883.70	4.38	43.03	38.65	238.31	215.30	937.18
5426.33	4.19	42.74	38.55	236.77	214.81	1063.77
5968.96	4.00	42.45	38.46	235.23	214.31	1196.37
6511.60	3.80	42.17	38.36	233.69	213.82	1335.57
7054.23	3.61	41.88	38.27	232.16	213.32	1482.07
7596.86	3.41	41.59	38.17	230.62	212.83	1636.66
8139.50	3.22	41.30	38.08	229.08	212.33	1800.20
8682.13	3.03	41.01	37.98	227.54	211.84	1974.08
9224.76	2.83	40.72	37.89	226.00	211.34	2159.35
9767.40	2.64	40.43	37.79	224.47	210.85	2357.74
10310.03	2.45	40.14	37.70	222.93	210.35	2571.23
10852.66	2.25	39.86	37.60	221.39	209.86	2802.39
11395.30	2.06	39.57	37.51	219.85	209.36	3054.07
11937.93	1.87	39.28	37.41	218.31	208.86	3330.64
12480.56	1.67	38.99	37.32	216.78	208.37	3637.39
13023.20	1.48	38.70	37.22	215.24	207.87	3981.70
13565.83	1.29	38.42	37.13	213.70	207.38	4374.03
14108.46	1.10	38.13	37.03	212.16	206.88	4829.04
14651.10	.90	37.84	36.94	210.62	206.39	5372.00
15193.73	.71	37.56	36.84	209.09	205.89	6048.55
15736.36	.52	37.27	36.75	207.55	205.40	6926.44
16278.99	.33	36.98	36.65	206.01	204.90	8238.04

REQUIRED UA (WATTS/K) = 8238.0
AVERAGE LMDT (K) = 1.976
REQUIRED NTU = 1.4

Figure 6.

COOLING CURVE FOR HX4

HEAT TFR 1 TO 2	TEMP DIFF 1 TO 2	TEMP 1 HIGH PRESS	TEMP 2 LOW PRESS	TEMP 3 INTER PRESS	TEMP DIFF 2 TO 3	HEAT TFR 2 TO 3	HEAT TFR TOTAL
0.000	.326	36.980	36.654	36.991	.337	0.000	0.000
726.301	.380	36.597	36.209	36.610	.401	1841.796	2568.097
1452.601	.450	36.213	35.763	36.228	.465	3683.592	5136.193
2178.902	.511	35.830	35.318	35.847	.529	5525.388	7704.290
2905.202	.574	35.447	34.873	35.466	.593	7367.185	10272.387
3631.503	.636	35.064	34.428	35.085	.657	9208.981	12840.484
4357.804	.699	34.682	33.983	34.704	.722	11050.777	15408.580
5084.104	.762	34.300	33.538	34.324	.786	12892.573	17976.677
5810.405	.825	33.918	33.093	33.944	.851	14734.369	20544.774
6536.706	.888	33.536	32.648	33.564	.916	16576.165	23112.871
7263.006	.952	33.155	32.203	33.184	.981	18417.961	25680.967
7989.307	1.016	32.775	31.758	32.804	1.046	20259.757	28249.064
8715.607	1.081	32.394	31.314	32.424	1.111	22101.554	30817.161
9441.908	1.146	32.014	30.869	32.045	1.176	23943.350	33385.258
10168.209	1.211	31.635	30.424	31.666	1.241	25785.146	35953.354
10894.509	1.276	31.256	29.980	31.287	1.307	27626.942	38521.451
11620.810	1.342	30.877	29.535	30.908	1.373	29468.738	41089.548
12347.110	1.408	30.499	29.091	30.530	1.439	31310.534	43657.645
13073.411	1.474	30.121	28.647	30.152	1.505	33152.330	46225.741
13799.712	1.541	29.744	28.203	29.774	1.571	34994.126	48793.838
14526.012	1.608	29.367	27.759	29.396	1.638	36835.923	51361.935
15252.313	1.676	28.991	27.315	29.019	1.704	38677.719	53930.032
15978.614	1.744	28.615	26.871	28.642	1.771	40519.515	56498.128
16704.914	1.812	28.240	26.427	28.265	1.838	42361.311	59066.225
17431.215	1.881	27.865	25.984	27.889	1.905	44203.107	61634.322
18157.515	1.950	27.491	25.540	27.513	1.972	46044.903	64202.419
18883.816	2.020	27.117	25.097	27.137	2.040	47886.699	66770.515
19610.117	2.091	26.744	24.654	26.762	2.108	49728.496	69338.612
20336.417	2.161	26.372	24.211	26.387	2.176	51570.292	71906.709
21062.718	2.233	26.000	23.768	26.012	2.244	53412.088	74474.806
21789.018	2.304	25.630	23.325	25.638	2.313	55253.884	77042.902

REQUIRED UA (WATTS/K)-1 TO 2 = 22045.223
AVERAGE LMDT (K)-1 TO 2 = .988
REQUIRED NTU-1-TO-2 = 3.8

REQUIRED UA (WATTS/K)-2 TO 3 = 54432.547
AVERAGE LMDT (K)-2 TO 3 = 1.015
REQUIRED NTU-2-TO-3 = 9.4

TOTAL REQUIRED UA (WATTS/K) = 76477.770
AVERAGE LMDT (K) = 1.010
TOTAL REQUIRED NTU = 13.2

Figure 7.

COOLING CURVE FOR HX5

HEAT TFR 1 TO 2	TEMP DIFF 1 TO 2	TEMP 1 HIGH PRESS	TEMP 2 LOW PRESS	TEMP 3 INTER PRESS	TEMP DIFF 2 TO 3	HEAT TFR 2 TO 3	HEAT TFR TOTAL
0.000	2.304	25.630	23.325	25.638	2.313	0.000	0.000
648.376	2.219	25.299	23.080	25.312	2.232	778.044	1426.420
1298.752	2.135	24.940	22.834	24.987	2.153	1556.088	2852.840
1945.128	2.051	24.640	22.589	24.662	2.073	2334.132	4279.260
2593.504	1.968	24.311	22.344	24.337	1.994	3112.176	5705.680
3241.880	1.885	23.983	22.098	24.013	1.915	3890.220	7132.100
3890.257	1.803	23.656	21.853	23.689	1.836	4668.263	8558.520
4538.633	1.721	23.329	21.608	23.366	1.757	5446.307	9984.940
5187.009	1.640	23.003	21.363	23.043	1.679	6224.351	11411.360
5835.385	1.560	22.678	21.118	22.720	1.602	7002.395	12837.780
6483.761	1.481	22.354	20.873	22.398	1.524	7780.439	14264.200
7132.137	1.402	22.030	20.628	22.076	1.447	8558.483	15690.620
7780.513	1.324	21.708	20.384	21.755	1.371	9336.527	17117.040
8428.889	1.247	21.386	20.139	21.434	1.295	10114.571	18543.460
9077.265	1.171	21.065	19.895	21.113	1.219	10892.615	19969.880
9725.641	1.095	20.745	19.650	20.794	1.144	11670.659	21396.300
10374.018	1.021	20.426	19.406	20.475	1.069	12448.703	22822.720
11022.394	.947	20.108	19.161	20.156	.995	13226.746	24249.140
11670.770	.874	19.792	18.917	19.838	.921	14004.790	25675.560
12319.146	.803	19.476	18.673	19.521	.848	14782.834	27101.980
12967.522	.732	19.161	18.429	19.204	.775	15560.878	28528.400
13615.898	.663	18.848	18.185	18.888	.703	16338.922	29954.820
14264.274	.595	18.536	17.941	18.573	.632	17116.966	31381.240
14912.650	.527	18.225	17.698	18.258	.561	17895.010	32807.660
15561.026	.462	17.916	17.454	17.945	.491	18673.054	34234.080
16209.402	.397	17.608	17.211	17.632	.421	19451.098	35660.500
16857.778	.334	17.301	16.967	17.320	.353	20229.142	37086.920
17506.155	.272	16.996	16.724	17.009	.285	21007.186	38513.340
18154.531	.212	16.692	16.481	16.699	.218	21785.229	39939.760
18802.907	.153	16.391	16.238	16.390	.152	22563.273	41366.180
19451.283	.095	16.091	15.995	16.082	.087	23341.317	42792.600

REQUIRED UA (WATTS/K)-1 TO 2 = 31126.740
AVERAGE LMDT (K)-1 TO 2 = .625
REQUIRED NTU-1-TO 2 = 5.3

REQUIRED UA (WATTS/K)-2 TO 3 = 36425.213
AVERAGE LMDT (K)-2 TO 3 = .641
REQUIRED NTU-2-TO-3 = 6.2

TOTAL REQUIRED UA (WATTS/K) = 67551.953
AVERAGE LMDT (K) = .634
TOTAL REQUIRED NTU = 11.6

Figure 8.

COOLING CURVE FOR HX6

HEAT TFR 1 TO 2	TEMP DIFF 1 TO 2	TEMP 1 HIGH PRESS	TEMP 2 LOW PRESS	TEMP 3 INTER PRESS	TEMP DIFF 2 TO 3	HEAT TFR 2 TO 3	HEAT TFR TOTAL
0.000	.095	16.091	15.995	16.068	.072	0.000	0.000
236.811	.139	15.981	15.843	15.959	.116	274.756	511.567
475.622	.182	15.872	15.690	15.851	.160	549.512	1023.134
710.434	.226	15.764	15.538	15.742	.204	824.268	1534.701
947.245	.270	15.655	15.386	15.634	.249	1099.023	2046.268
1184.056	.314	15.547	15.233	15.526	.293	1373.779	2557.835
1420.867	.358	15.439	15.081	15.418	.337	1648.535	3069.402
1657.678	.402	15.331	14.929	15.311	.382	1923.291	3580.969
1894.490	.447	15.224	14.777	15.203	.426	2198.047	4092.537
2131.301	.491	15.117	14.625	15.096	.471	2472.803	4604.104
2368.112	.536	15.010	14.473	14.989	.515	2747.559	5115.671
2604.923	.581	14.903	14.321	14.882	.560	3022.315	5627.238
2841.734	.627	14.796	14.170	14.775	.605	3297.070	6138.805
3078.546	.672	14.690	14.018	14.668	.650	3571.826	6650.372
3315.357	.718	14.584	13.867	14.562	.695	3846.582	7161.939
3552.168	.763	14.478	13.715	14.455	.740	4121.338	7673.506
3788.979	.809	14.373	13.564	14.349	.785	4396.094	8185.073
4025.790	.855	14.268	13.413	14.243	.831	4670.850	8696.640
4262.602	.901	14.163	13.261	14.138	.876	4945.606	9208.207
4499.413	.946	14.058	13.110	14.032	.922	5220.362	9719.774
4736.224	.994	13.953	12.959	13.927	.968	5495.117	10231.341
4973.035	1.041	13.849	12.809	13.822	1.014	5769.873	10742.908
5209.846	1.087	13.745	12.658	13.717	1.059	6044.629	11254.475
5446.658	1.134	13.642	12.507	13.613	1.105	6319.385	11766.043
5683.469	1.181	13.538	12.357	13.509	1.152	6594.141	12277.610
5920.280	1.228	13.435	12.207	13.405	1.198	6868.897	12789.177
6157.091	1.275	13.332	12.057	13.301	1.244	7143.653	13300.744
6393.902	1.323	13.229	11.907	13.197	1.291	7418.408	13812.311
6630.714	1.370	13.127	11.757	13.094	1.337	7693.164	14323.878
6867.525	1.417	13.024	11.607	12.991	1.384	7967.920	14835.445
7104.336	1.465	12.922	11.457	12.888	1.431	8242.676	15347.012

REQUIRED UA (WATTS/K)-1 TO 2 = 14478.030
AVERAGE LMDT (K)-1 TO 2 = .491
REQUIRED NTU-1-TO-2 = 4.2

REQUIRED UA (WATTS/K)-2 TO 3 = 18367.162
AVERAGE LMDT (K)-2 TO 3 = .449
REQUIRED NTU-2-TO-3 = 5.4

TOTAL REQUIRED UA (WATTS/K) = 32845.192
AVERAGE LMDT (K) = .472
TOTAL REQUIRED NTU = 9.6

Figure 9.

COOLING CURVE FOR HX7

HEAT TFR 1 TO 2	TEMP DIFF 1 TO 2	TEMP 1 HI PRESS	TEMP 2 LOW PRESS	ENTHALPY HI PRESS	ENTHALPY LOW PRESS	SUMMED UA
0.00	1.45	12.92	11.48	68.98	72.36	0.00
407.34	1.39	12.75	11.36	67.82	71.72	287.83
815.88	1.33	12.57	11.24	66.66	71.07	587.65
1223.82	1.28	12.40	11.12	65.51	70.43	900.37
1631.76	1.22	12.23	11.00	64.35	69.79	1227.00
2039.70	1.17	12.05	10.89	63.19	69.15	1568.44
2447.64	1.11	11.88	10.77	62.04	68.51	1926.56
2855.59	1.06	11.71	10.65	60.88	67.87	2302.14
3263.53	1.01	11.54	10.53	59.72	67.23	2696.04
3671.47	.96	11.37	10.42	58.57	66.58	3112.66
4079.41	.91	11.21	10.30	57.41	65.94	3551.24
4487.35	.86	11.04	10.18	56.26	65.30	4014.76
4895.29	.81	10.87	10.07	55.10	64.66	4505.51
5303.23	.76	10.71	9.95	53.94	64.02	5025.00
5711.17	.72	10.55	9.83	52.79	63.38	5578.93
6119.11	.67	10.39	9.72	51.63	62.73	6166.70
6527.05	.63	10.23	9.60	50.47	62.09	6792.72
6934.99	.59	10.08	9.49	49.32	61.45	7458.45
7342.93	.56	9.93	9.37	48.16	60.81	8160.74
7750.87	.52	9.78	9.26	47.01	60.17	8896.18
8158.81	.49	9.63	9.14	45.85	59.53	9731.20
8566.76	.46	9.49	9.03	44.69	58.89	10587.03
8974.70	.44	9.35	8.91	43.54	58.24	11495.97
9382.64	.41	9.21	8.80	42.38	57.60	12460.64
9790.58	.39	9.07	8.68	41.22	56.96	13484.47
10198.52	.36	8.93	8.57	40.07	56.32	14572.50
10606.46	.34	8.79	8.45	38.91	55.68	15728.16
11014.40	.31	8.65	8.34	37.75	55.04	16956.46
11422.34	.29	8.51	8.23	36.60	54.39	18267.02
11830.28	.26	8.37	8.12	35.44	53.75	19654.37
12238.22	.22	8.22	8.00	34.29	53.11	21569.83

REQUIRED UA (WATTS/K) = 21569.8
AVERAGE LMDT (K) = .567
REQUIRED NTU = 6.1

Figure 10.

COOLING CURVE FOR HXS

HEAT TRS 1 TO 2	TEMP DIFF 1 TO 2	TEMP 1 HI PRESS	TEMP 2 LOW PRESS	ENTHALPY HI PRESS	ENTHALPY LOW PRESS	SUMMED UA
0.00	.29	8.22	8.01	34.29	53.11	0.00
149.68	.28	8.16	7.88	33.86	52.33	620.01
299.35	.36	8.11	7.74	33.44	51.54	1084.46
449.03	.44	8.05	7.61	33.01	50.76	1455.64
598.70	.52	7.99	7.47	32.59	49.98	1766.09
748.38	.60	7.94	7.34	32.16	49.19	2033.55
898.05	.67	7.88	7.21	31.74	48.41	2260.05
1047.73	.75	7.82	7.07	31.32	47.63	2470.86
1197.40	.82	7.76	6.94	30.89	46.84	2671.06
1347.08	.89	7.70	6.81	30.47	46.06	2846.34
1496.75	.96	7.64	6.68	30.04	45.28	3008.46
1646.43	1.02	7.58	6.56	29.62	44.49	3150.54
1796.10	1.09	7.52	6.43	29.19	43.71	3301.27
1945.78	1.15	7.45	6.30	28.77	42.93	3434.08
2095.45	1.21	7.39	6.18	28.35	42.14	3561.77
2245.13	1.27	7.33	6.06	27.92	41.36	3682.58
2394.80	1.32	7.26	5.94	27.50	40.58	3798.17
2544.48	1.37	7.19	5.82	27.07	39.79	3900.21
2694.16	1.42	7.13	5.70	26.65	39.01	4016.29
2843.83	1.47	7.06	5.59	26.22	38.23	4110.01
2993.51	1.51	6.99	5.48	25.80	37.44	4220.56
3143.18	1.54	6.92	5.37	25.38	36.66	4318.65
3292.86	1.58	6.84	5.27	24.95	35.87	4414.50
3442.53	1.60	6.77	5.16	24.53	35.09	4508.77
3592.21	1.62	6.69	5.07	24.10	34.31	4601.56
3741.88	1.64	6.61	4.97	23.68	33.52	4692.34
3891.56	1.65	6.53	4.89	23.25	32.74	4784.51
4041.23	1.65	6.45	4.80	22.83	31.96	4875.47
4190.91	1.64	6.37	4.73	22.41	31.17	4964.67
4340.58	1.62	6.28	4.66	21.98	30.39	5058.62
4490.26	1.59	6.19	4.60	21.56	29.61	5151.88

REQUIRED UA (WATTS/K) = 5151.9
AVERAGE LMDT (K) = .872
REQUIRED NTU = 3.8

Figure 11.

TURBINE SPECIFICATIONS

TURBINE T1

ADIABATIC EFFICIENCY	.835	
MASS FLOW-GM/SEC	913.840	
PRESSURE RATIO	1.900	
WORK-WATTS	41842.975	
	INLET	OUTLET
PRESSURE-ATM	11.400	6.000
TEMPERATURE-K	45.655	37.000
ENTHALPY-J/GM	252.152	206.364
ENTROPY-J/GM-K	16.532	16.780
SPECIFIC HEAT,CP-J/GM-K	5.304	5.286
SPECIFIC HEAT RATIO,CP/CV	1.692	1.690
DENSITY-GM/CC	1.187E-02	7.804E-03
VISCOSITY-GM/CM-SEC	6.276E-05	5.400E-05

Figure 12.

TURBINE SPECIFICATIONS

TURBINE T2

ADIABATIC EFFICIENCY	.820	
MASS FLOW-GM/SEC	470.659	
PRESSURE RATIO	4.538	
WORK-WATTS	23185.772	
	INLET	OUTLET
PRESSURE-ATM	5.900	1.300
TEMPERATURE-K	25.650	16.000
ENTHALPY-J/GM	145.901	96.638
ENTROPY-J/GM-K	14.862	15.589
SPECIFIC HEAT,CP-J/GM-K	5.390	5.307
SPECIFIC HEAT RATIO,CP/CV	1.722	1.702
DENSITY-GM/CC	1.115E-02	3.903E-03
VISCOSITY-GM/CM-SEC	4.356E-05	3.113E-05

TURBINE SPECIFICATIONS

TURBINE T3

ADIABATIC EFFICIENCY	.820	
MASS FLOW-GM/SEC	443.182	
PRESSURE RATIO	4.234	
WORK-WATTS	9538.468	
	INLET	OUTLET
PRESSURE-ATM	5.800	1.370
TEMPERATURE-K	12.891	8.000
ENTHALPY-J/GM	74.634	53.111
ENTROPY-J/GM-K	11.032	11.696
SPECIFIC HEAT,CP-J/GM-K	6.036	5.722
SPECIFIC HEAT RATIO,CP/CV	1.941	1.840
DENSITY-GM/CC	2.370E-02	9.007E-03
VISCOSITY-GM/CM-SEC	2.988E-05	1.973E-05

Figure 13.

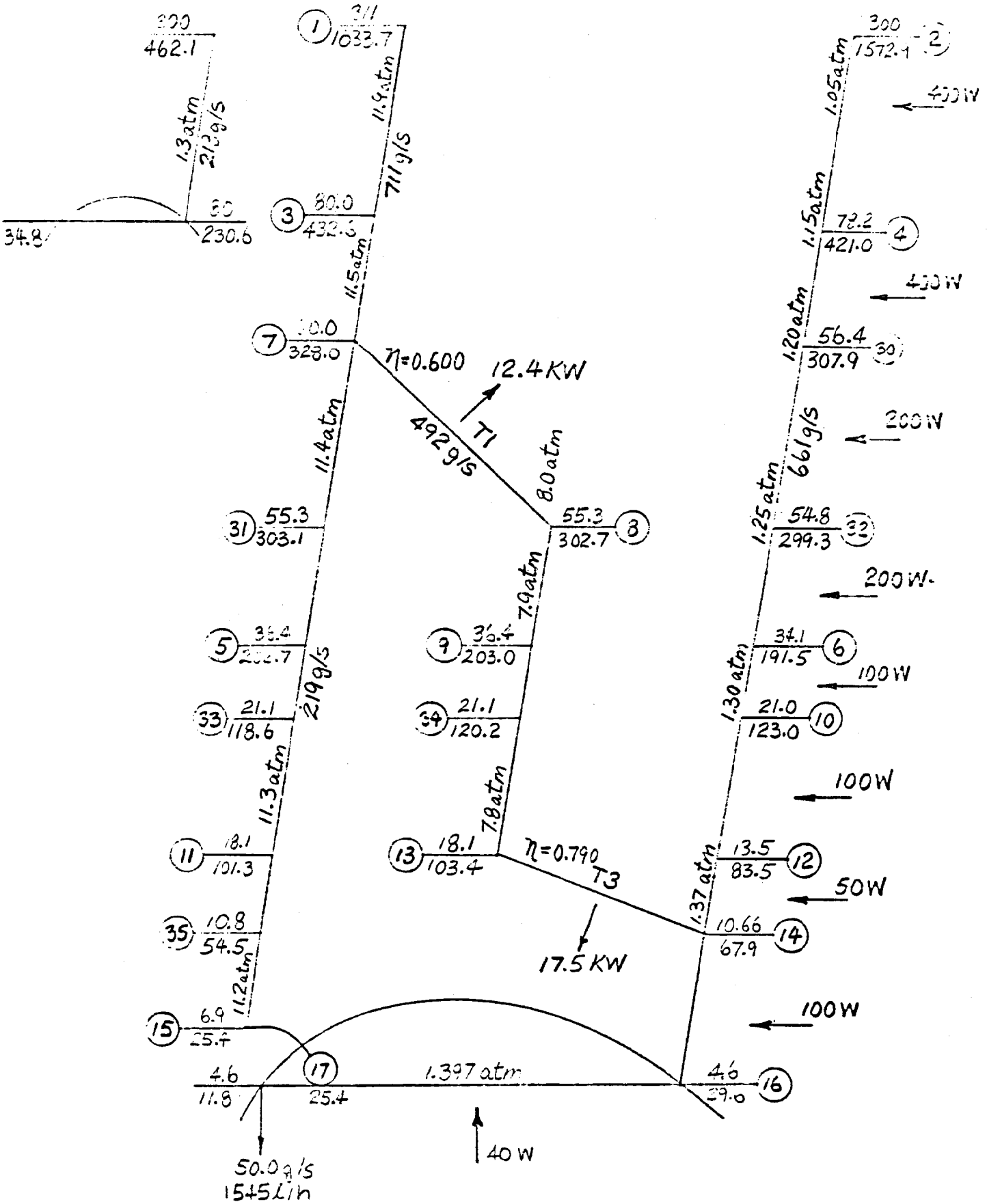

300
462.1
1.3atm
34.8
230.6
1
1033.7
11.9atm
711g/s
3
80.0
11.5atm
7
328.0
η=0.600
12.4KW
T1
492g/s
11.4atm
8.0atm
31
55.3
303.1
55.3
302.7
8
7.9atm
5
36.4
203.0
9
219g/s
33
21.1
118.6
34
21.1
120.2
11.3atm
7.8atm
11
18.1
101.3
13
18.1
103.4
η=0.790
T3
35
10.8
54.5
17.5KW
11.2atm
15
6.9
25.4
17
4.6
11.8
25.4
1.397atm
4.6
16
40W
50.0g/s
1545l/h
300
1572.1
2
1.05atm
400W
1.15atm
78.2
421.0
4
400W
1.20atm
56.4
307.9
30
200W
661g/s
1.25atm
54.8
299.3
32
200W
34.1
191.5
6
100W
1.30atm
21.0
123.0
10
100W
13.5
83.5
12
50W
1.37atm
10.66
67.9
14
100W

Figure 14.

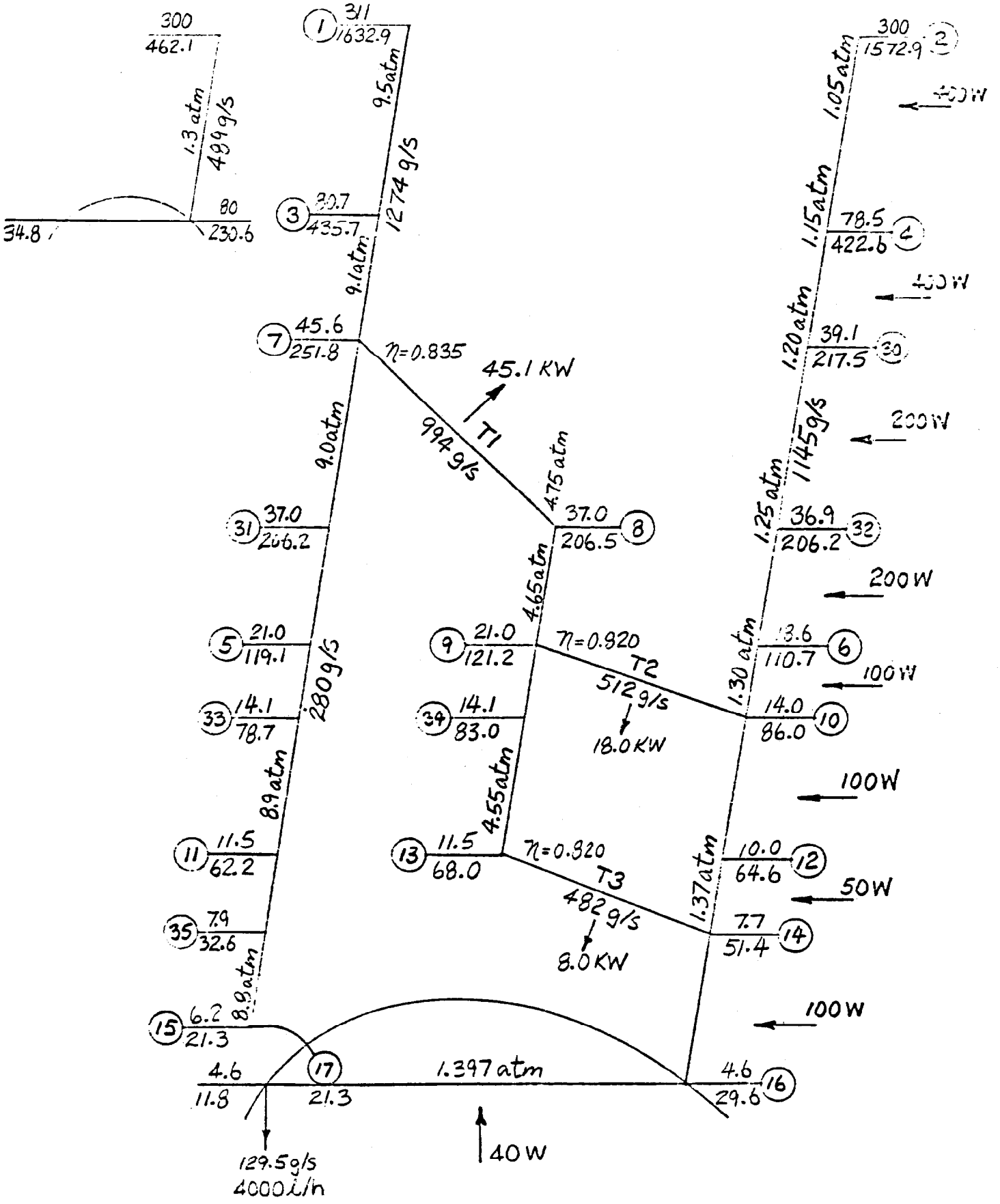
300
462.1
1.3 atm
489 g/s
80
230.6
34.8
1
311
1632.9
9.5atm
1274 g/s
3
80.7
435.7
9.1atm
7
45.6
251.8
η=0.835
45.1 KW
T1
994 g/s
9.0atm
4.75 atm
31
37.0
206.2
37.0
206.5
8
4.65atm
5
21.0
119.1
280 g/s
9
21.0
121.2
η=0.820
T2
512 g/s
18.0 KW
33
14.1
78.7
34
14.1
83.0
8.9atm
4.55atm
11
11.5
62.2
13
11.5
68.0
η=0.820
T3
482 g/s
8.0 KW
35
7.9
32.6
8.8atm
15
6.2
21.3
17
4.6
11.8
21.3
1.397 atm
4.6
29.6
16
129.5 g/s
4000 l/h
40 W
300
1572.9
2
1.05atm
400 W
1.15atm
78.5
422.6
4
400 W
1.20atm
39.1
217.5
30
200 W
1145 g/s
1.25atm
36.9
206.2
32
200 W
1.30 atm
13.6
110.7
6
100 W
14.0
86.0
10
100 W
1.37atm
10.0
64.6
12
50 W
7.7
51.4
14
100 W

Figure 15.

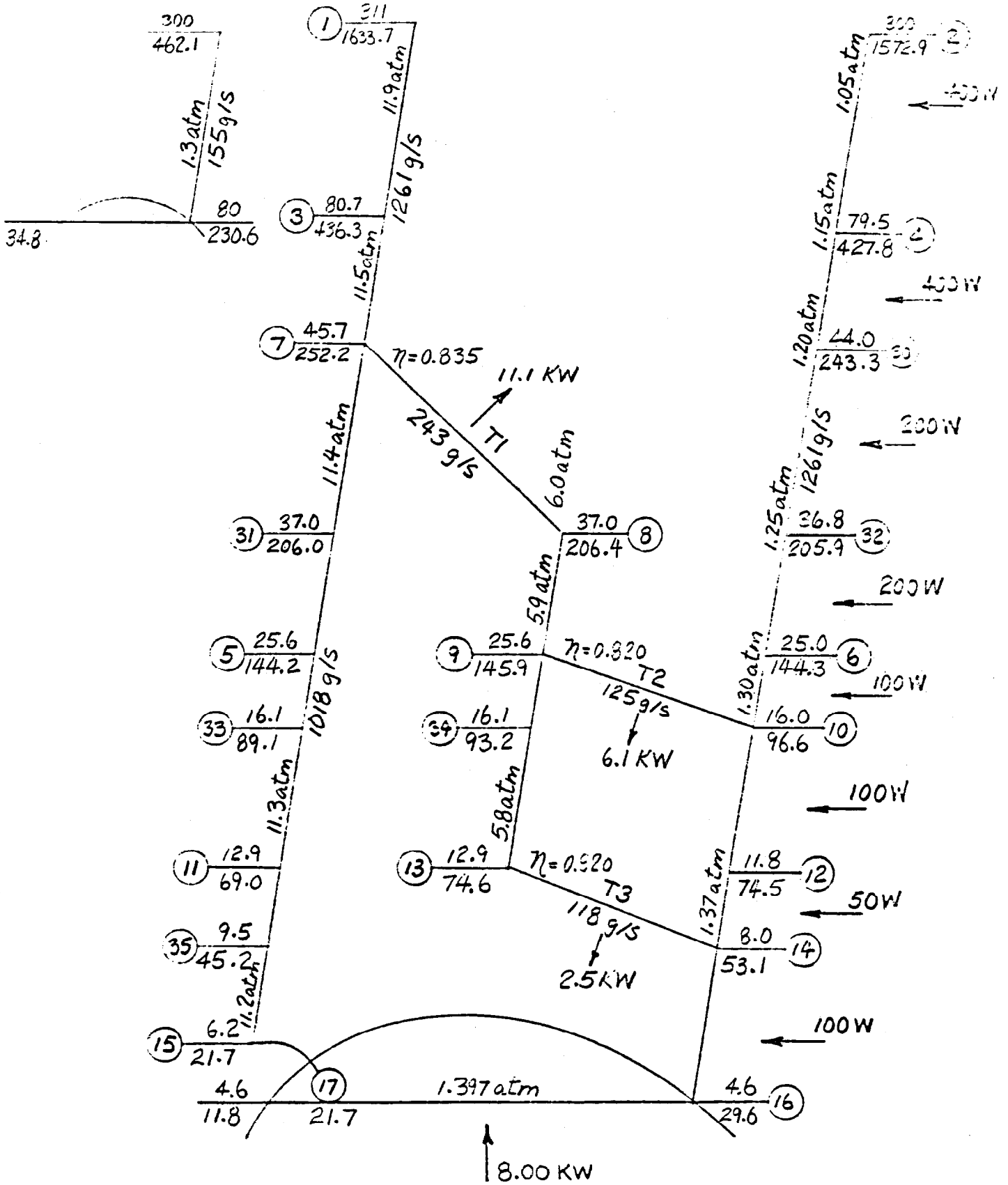
300
462.1
1.3atm
155g/s
80
230.6
34.8
1
311
1633.7
11.9atm
1261g/s
3
80.7
436.3
11.5atm
7
45.7
252.2
η=0.835
11.1 KW
243 g/s
T1
6.0atm
11.4atm
31
37.0
206.0
8
37.0
206.4
5.9atm
5
25.6
144.2
9
25.6
145.9
η=0.820
T2
125g/s
6.1 KW
1018 g/s
33
16.1
89.1
34
16.1
93.2
11.3atm
5.8atm
11
12.9
69.0
13
12.9
74.6
η=0.920
T3
118 g/s
2.5KW
35
9.5
45.2
11.2atm
15
6.2
21.7
17
4.6
11.8
21.7
1.397atm
16
4.6
29.6
8.00 KW
300
1572.9
2
1.05atm
400W
1.15atm
79.5
427.8
4
400W
1.20atm
44.0
243.3
30
200W
1261g/s
1.25atm
36.8
205.9
32
200W
1.30atm
25.0
144.3
6
100W
16.0
96.6
10
100W
1.37atm
11.8
74.5
12
50W
8.0
53.1
14
100W

Figure 16.