FERMILAB-Proposal-0658

A Letter of Intent to Study Hadronic Final States in Deep Inelastic Lepton Scattering by the Addition of a Vertex Detector to a Forward Spectrometer proposed for the Tevatron Muon Beam at FNAL.

CERN/FREIBURG/MUNICH MPI/OXFORD/RUTHERFORD/WUPPERTAL COLLABORATION*

ABSTRACT

We propose to study hadronic final states in deep inelastic muon scattering in the FNAL Tevatron Muon Beam using an existing vertex detector which uses a 2m streamer chamber containing a 1m liquid H_2 target. This detector combines high multi-track efficiency with very good spatial resolution capabilities. High statistics can be achieved selectively by triggering over well defined kinematic regions of Q^2 and W^2. With good particle identification, this detector will be a very powerful tool in the study of quark and gluon jets.

This detector is proposed as an addition to a muon forward spectrometer already planned and collaboration is requested.

*Contact person: V. Eckardt, Max Planck Institut, Munich/EP Division, CERN

1) Introduction

The study of final hadronic states in deep inelastic scattering of leptons on nucleons will continue to play and increasingly important role in our understanding of nucleon sub-structure. The measurement of inclusive structure functions at higher energies determines the evolution of the momentum distributions of the quark and gluon constituents with Q^2. However, QCD theories and confined quarks and gluons predict that more direct evidence of their nature depends on the observation of hadrons recognised as being 'decay' fragments of these particles. We maintain that the increased energy of the Tevatron 750 GeV muon beam will allow this picture of quark/gluon fragmentation to be confirmed in a manner complementary to results already established in e^+e^- annihilation experiments at the highest available energies of PETRA.

A comprehensive study of hadronic final states is planned by the European Muon Collaboration in the CERN SPS 280 GeV muon beam using a large vertex detector[1]. Following the completion of this work, we propose that a major part of this vertex detector could be transferred to the planned muon Tevatron beam at FNAL to supplement a proposed μ forward spectrometer. This vertex detector is based on a triggerable streamer chamber with additional Cerenkov and other detectors; thus combining good track reconstruction capability with particle identification over a wide momentum range.

Using the 750 GeV Tevatron beam, our measurements can be extended in Q^2 from 150 to 400 GeV^2 and in CM energy W^2 from 400 to 1300 GeV^2. Fig. 1 shows the number of events as a function of W^2 expected from a 1m H_2 target and an integrated flux of 10^{18} protons (corresponding to $3.5 \times 10^{12} \mu^+$'s). The corresponding numbers for the CERN SPS μ beam and the Tevatron ν beam are shown for comparison. It is clear that lepton-quark interactions can be explored in an energy domain similar to e^+e^- interactions at PETRA and PEP, and well beyond that possible with broad band neutrino beams into H_2/Ne bubble chambers.

2) Physics Motivation

(i) Quark and Gluon Jets

It is well known that the current theory of perturbative QCD makes clear predictions concerning the energy and momentum distributions of hadrons produced in lepton-nucleon scattering. In paticular, the zeroth order 2 jet picture arising from the current quark and diquark fragmentation will be modified by hard gluon radiation (g) from the current quark producing an additional hadron jet (Fig. 2). Such 3 jet structures have been observed in e^+e^- experiments[2], namely $q\bar{q}g$ in this case, but direct evidence of this kind has not yet appeared in lepton-hadron experiments. Instead, the search for perturbative QCD effects has been limited to the behaviour of single hadron inclusive distributions in z[3] and $p_\perp^2$ [4] (Fig. 3) with respect to the current jet axis.

This situation will improve when more data becomes available from the present and future EMC experiments at CERN. But there are good indications that the non-perturbative effects of QCD may still dominate at presently accessible values of W. In particular, the results from e^+e^- annihilation at PETRA show that separation of the jets depends crucially on their CM energy $\sqrt{s}$ with the best evidence for jet broadening coming from data at $\sqrt{s} > 27$ GeV (Fig. 4). The corresponding variable in lepton-hadron scattering seems to be the CM energy W of the γN system. For example, the rapidity distribution of hadron charge/event from the νp BEBC experiment [3] at the highest values of W separates naturally into target diquark and current quark fragments in this hadronic CM frame. Also, theoretical predictions of the variation of thrust[5] and $\langle p_\perp^2 \rangle$ [6] in perturbative QCD point to W as the important variable.

Hence, it is expected that good evidence for jets and in particular identifiable gluon jets will depend strongly on W. <u>It is possible that separation of individual quark and gluon jets will not be statistically significant below a W of ∿25 GeV</u>. Given the identification of jet like events, new tests of QCD are possible, for example, asymmetries in the angle Φ between lepton and hadron planes reconstructed for each event.

(ii) Multiplicities and Fragmentation Functions

At present energies, published data from μp and νp experiments show charged multiciplities $\langle n_{ch} \rangle$ increasing as $\ln W^2$ in approximate agreement with e^+e^- annihilation in the same W range. It is known that the dramatic rise of $\langle n_{ch} \rangle$ in the latter experiments at higher W is associated with a rise in the rapidity plateau near $y = 0$ indicative of gluon fragmentation. In this proposed experiment, the total length of the rapidity extends to 7 units. This will facilitate a cleaner separation of the target and current fragmentation regions leading to good measurements of the diquark fragmentation function perhaps for the first time. We expect this function to remain unmodified by perturbative QCD effects. Also, higher energies will clarify the determination of the light and heavy quark fragmentation functions and enable the QCD predictions to be tested to higher Q^2. Here, it is essential to have good particle identification over a wide momentum range. Finally, the possibility of measuring the gluon fragmentation functions[7)] is considerably enhanced.

3) Detector Requirements

The detailed study of hadron final states described requires a sophisticated vertex detector capable of handling complex event topologies with high multiplicity, combined with the identification of particle types over a wide solid angle. The EMC vertex system is shown in Fig. 5a, and combined with a μ forward spectrometer in Fig. 5b. It consists of a streamer chamber inside a superconducting magnet with additional external detectors to aid track reconstruction accuracy and identify particles out to large angles.

(i) Vertex Magnet and Streamer Chamber

The vertex magnet is a dipole type superconducting magnet with circular coils of 2m inner diameter and a separation of 1m. The maximum field is 1.5T. The large aperture in the forward direction allows particles produced within $\pm 60^\circ$ in the horizontal plane and $\pm 10^\circ$ in the vertical plane to leave the magnet. The 2m diameter hole in the pole

permits optical recording parallel to the magnetic field for highest possible accuracy.

The streamer chamber has dimensions 2m x 1.2m x 0.72m. The depth of 0.72m is subdivided into 3 gaps 2 x 18cm and 1 x 36cm in the centre. A 1m long liquid H_2 target with a 70mm diameter target cell and 110 mm outer diameter is located in the upstream part of the sensitive volume. The HV power supplies feeding the Marx generator and the velocity of the cameras equipped with image intensifiers allow a repetition rate of 5 pictures/sec as presently used in the CERN NA5 experiment. Recent tests have shown that beam intensities up to 10^7/sec can be handled without precaution against δ-electrons.

(ii) External Detectors

To reduce the matching problems between the streamer chamber and the external detectors, MWPC's (PV1,2,3) are placed at the end of the streamer chamber body still inside the magnet. Large area TOF hodoscopes (F1,2,3,4), drift tube planes (WV1,2,3) and small MWPC's (PØa,b) are used for track measurements serving as a lever arm for momentum determination. In the central region up to a scattering angle of 10°, two large multicell Cerenkov counters (CØ, C1) achieve good π/K and p separation from 2.5 GeV/c. The counter CØ extends into the large angle region and is supplemented by a large aerogel system (CA) and the TOF hodoscopes. In this angular region there is good π/K separation up to 9 GeV/c, and $\pi/K/p$ separation to 5 GeV/c.

To assess the suitability of this system at FNAL energies of 750 GeV, hadron final states have been generated in a Monte Carlo program using a Feynman-Field model[8]. Some account of target fragmentation has been included but not a heavy quark and gluon fragmentation . The model produces a logarithmic rise in multiplicity with W^2. Produced hadrons are tracked through the vertex system and a forward spectrometer with an acceptance aperture of 2 x $1.2m^2$. Fig. 6 shows a typical event with

a charged multiplicity of 13. It shows that only 6 tracks could be momentum analysed in the forward spectrometer and demonstrates the pattern recognition requirements for the streamer chamber. It should be noted that on average, 6 muon beam tracks will be present at a rate of 3×10^6 μ's/sec. The distribution in momentum and position of charged hadrons in the external detectors has been compared with the same model predictions at 280 GeV μ energy. The results are listed in Table 1 and generally show that although there is some reduction (up to factor 50%) of particles in the outer region beyond $\pm 10^{\circ}$, the momentum distributions there are very similar.

It must be stressed that we expect a large proportion of lower momentum hadrons than this naive model predicts, especially for the multijet events described.

4) Conclusions

The essential features of the EMC vertex system are listed:

- a 2m streamer chamber with $\sim 4\pi$ acceptance in a 1.5T dipole field
- liquid H_2 or nuclear targets placed inside the sensitive volume
- a triggerable device handling beam intensities up to few x 10^7/sec
- good detection efficiency for complicated final states
- the streamer chamber with lever arm chambers gives momentum resolution $\Delta p/p \simeq 10^{-3} p$ (GeV/c)
- powerful particle identification over a wide range of momentum

We believe that the addition of a large part of this vertex detector to an existing muon forward spectrometer at FNAL will enable this exciting range of physics to be done. However, at this early stage no detailed estimates of cost sharing have been made in transferring this vertex system to FNAL and operating it there. Unless we can form a close collaboration with physicists in the United States who want to do this physics and have experience in operating a forward spectrometer in a muon beam, then we would not consider the transfer a realistic venture.

TABLE 1

Charged Hadron Distributions

μ interactions in 1m H_2 target

	750 GeV	280 GeV
Charged multiplicity $\langle n_{ch} \rangle$	11	8.3
Mean hadron momentum (GeV)	26	9
Proportion of all hadrons in central PV2	86%	83%
Proportion of all hadrons in outer PV1,3	4%	5%
Proportion of all hadrons in outer WV1,2	15%	20%
Proportion of all hadrons in outer TOF	6.5%	9%
Mean momentum through CA, outer CØ (GeV)	2.6	2.6
Mean momentum through C1, central CØ (GeV)	35	14

NB: Conditions - 750 GeV

$250 < \nu < 750$ GeV, $0 < Q^2 < 600$ GeV^2

280 GeV

$0 < \nu < 250$ GeV, $0 < Q^2 < 200$ GeV^2

FIGURE CAPTIONS

1) Number of events with hadronic mass^2 > W^2 for a) all Q^2 b) Q^2>50 (GeV/c)^2
The SPS μ beam and Tevatron Q-T ν's shown for camparison normalised to 10^{18} incoming protons.

2) Representative jet diagrams a) 2 jet $q + qq$
b) 3 jet $q + g + qq$
c) 3 jet $q + \bar{q} + qqq$

3) Hadron $\langle p_\perp^2 \rangle$ distribution with W^2 from EMC with $z > 0.2$, $Q^2 > 5$ GeV^2
(CHIO and BEBC data shown for comparison)

4) The distributions in $\langle p_\perp^2 \rangle$ for narrow and wide $q\bar{q}$ jets as fractions of z from e^+e^- experiments TASSO and PLUTO (reference 2)

5) a) EMC Vertex Detector:
PV1-3 MWPC's in magnet aperture; F1-F4 TOF Hodoscopes;
CØ, C1, CA Cerenkov counters; WV1-3 Drift Tube assemblies;
STR Streamer Chamber
b) The juxtaposition of the EMC vertex detector and the FNAL CCM spectrometer.

6) Single μ interaction at 750 GeV
Q^2 = 107 GeV^2, ν = 563 GeV, $\langle n_{ch} \rangle$ = 13
(a) tracks in vertex and forward spectrometer aperture
(b) tracks in streamer chamber with target outline shown (no tracks could be seen in this region)

REFERENCES

1) 'A Study of Final States in Deep Inelastic Lepton Scattering by the Addition of a Vertex Detector', European Muon Collaboration, CERN/SPSC/77-13

2) Tasso Collaboration, DESY 79/53
MARKJ Collaboration, MIT Report 106
Pluto Collaboration, DESY 79/51
JADE Collaboration, DESY 79/80.

3) 'Recent Results on Hadronic Final States in Charged Current Neutrino and Antineutrino Reactions'
N. Schmitz, Proceedings of 1979 International Symposium on Lepton Interaction at Fermilab.
J. Blietschau et al., Phys. Lett. 87B, 281 (1979).

4) European Muon Collaboration preliminary data
and C. Tao (CHIO Collaboration private communication).

5) P. Binétruy and G. Girardi, Nucl. Phys. B155, 150 (1979)
J. Ranft and G. Ranft KMU-HEP-78-15 (1978)

6) G. Altarelli and G. Martinelli, Phys. Lett. 76B, 89 (1978)

7) B. Andersson and G. Gustafson, Z. Physik C 3, 223 (1980)

8) R. Feynman and R. Field CALT-68-618

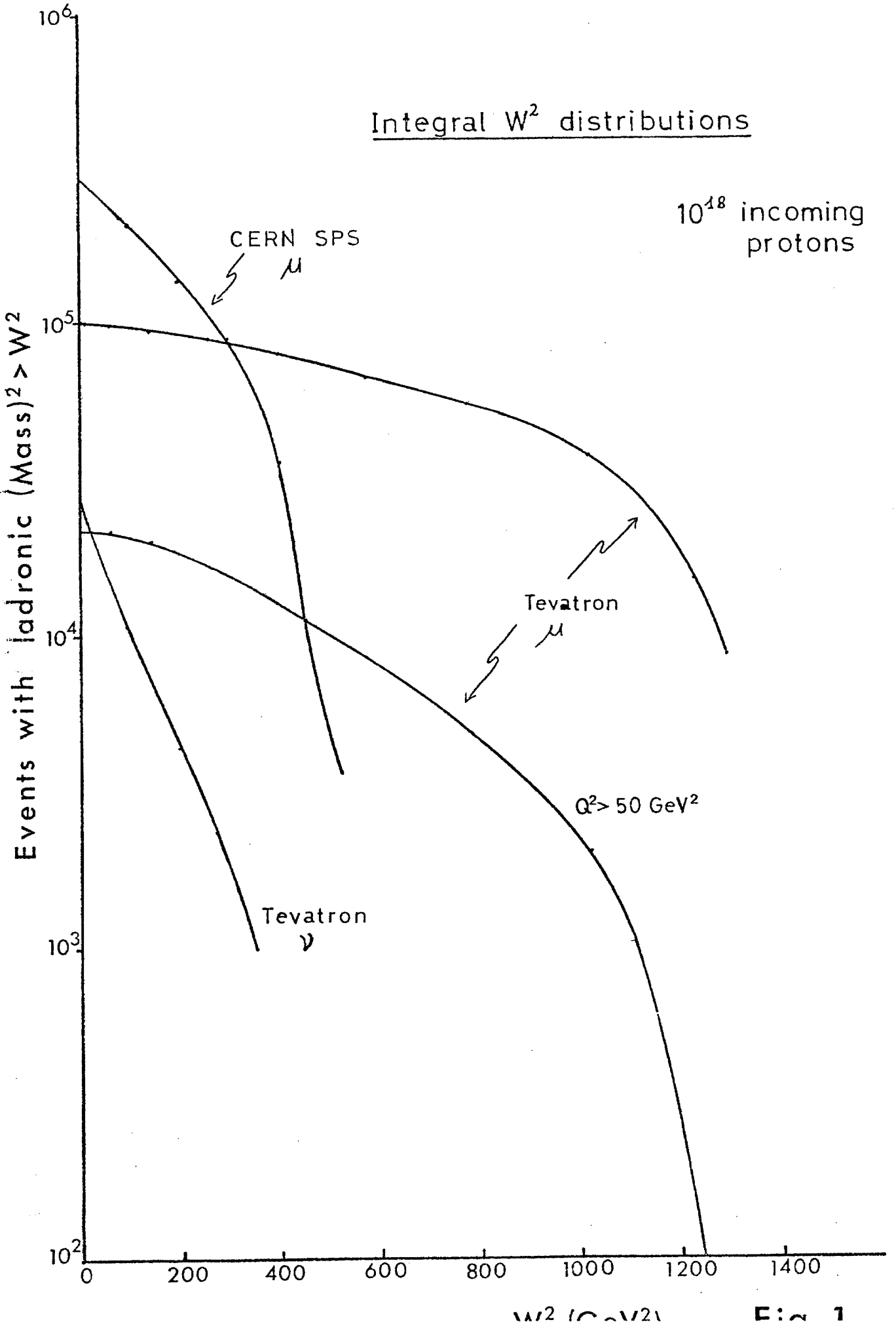
Integral W^2 distributions
10^{18} incoming protons
CERN SPS
μ
Tevatron
μ
Tevatron
ν
$Q^2 > 50$ GeV^2
Events with hadronic (Mass)$^2 > W^2$
10^6
10^5
10^4
10^3
10^2
0
200
400
600
800
1000
1200
1400
W^2 (GeV^2)

Fig. 1

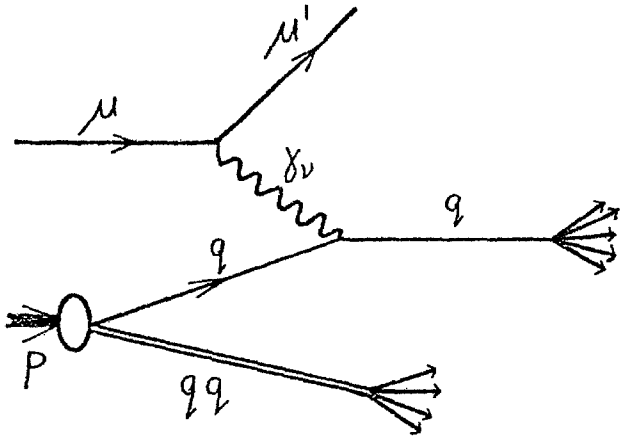

(a)

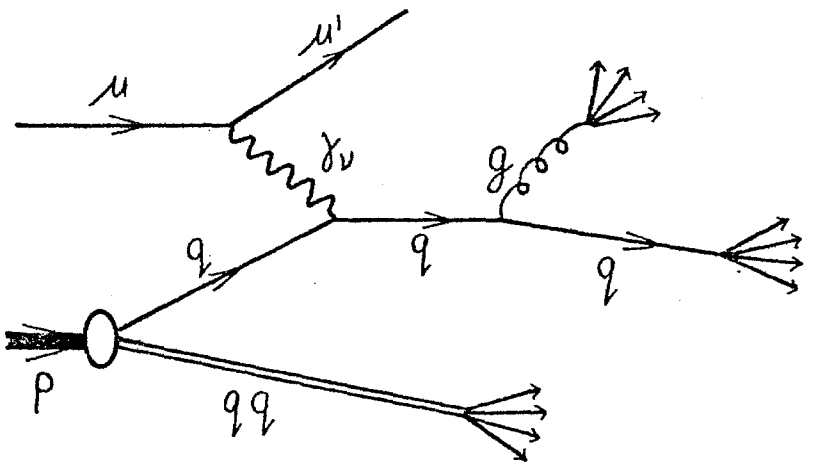

(b)

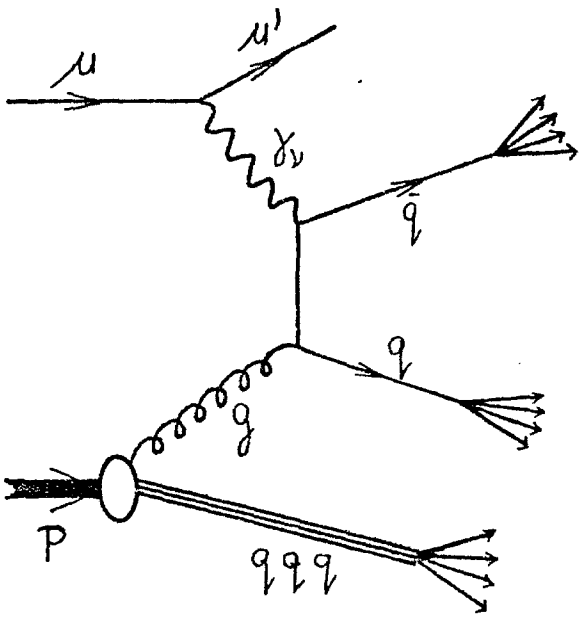

(c)

Fig. 2

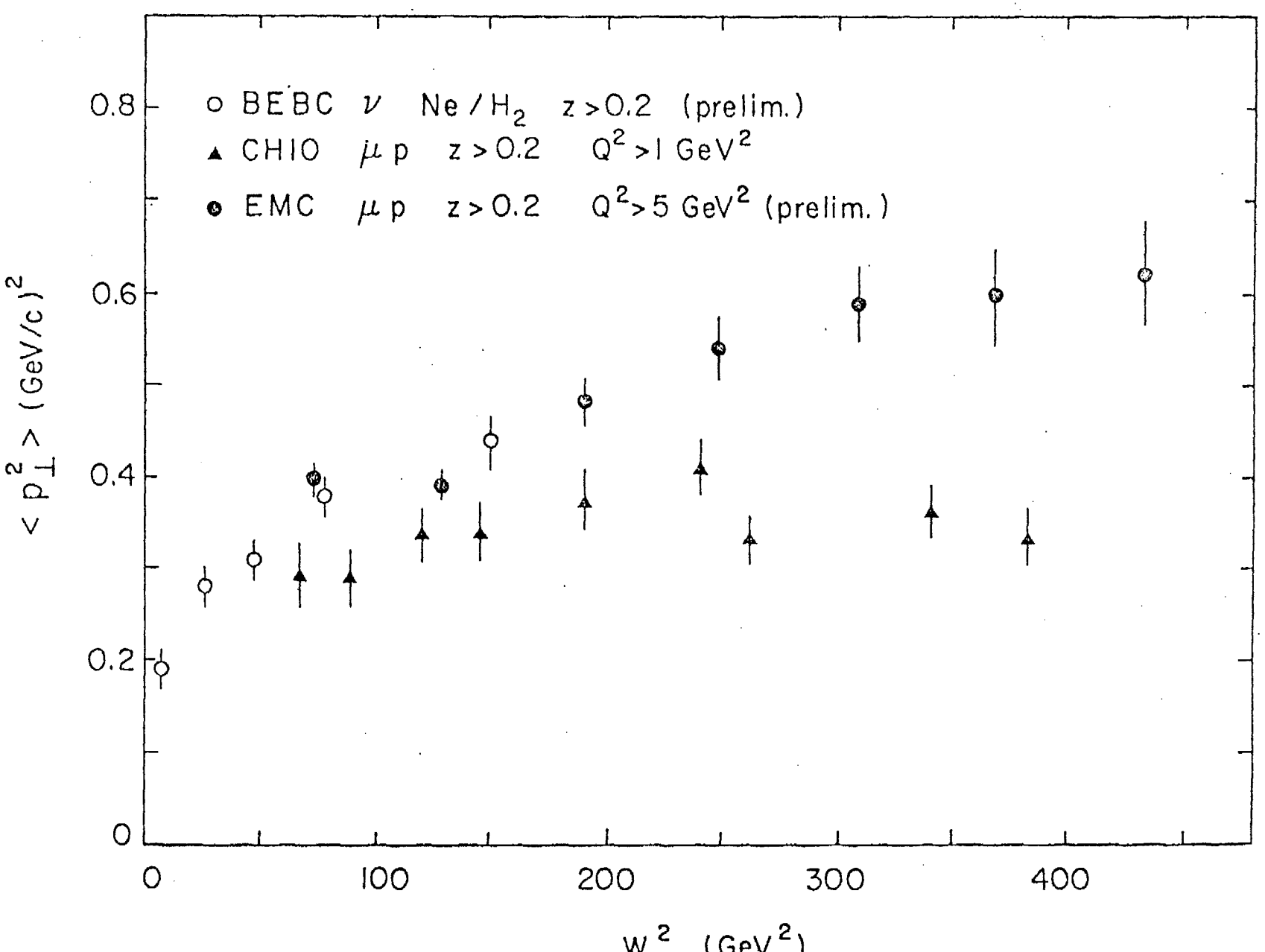
○ BEBC ν Ne / H2 z > 0.2 (prelim.)
▲ CHIO μ p z > 0.2 Q2 > 1 GeV2
● EMC μ p z > 0.2 Q2 > 5 GeV2 (prelim.)
< p⊥2 > (GeV/c)2
0.8
0.6
0.4
0.2
0
0
100
200
300
400
W2 (GeV2)

Fig. 3

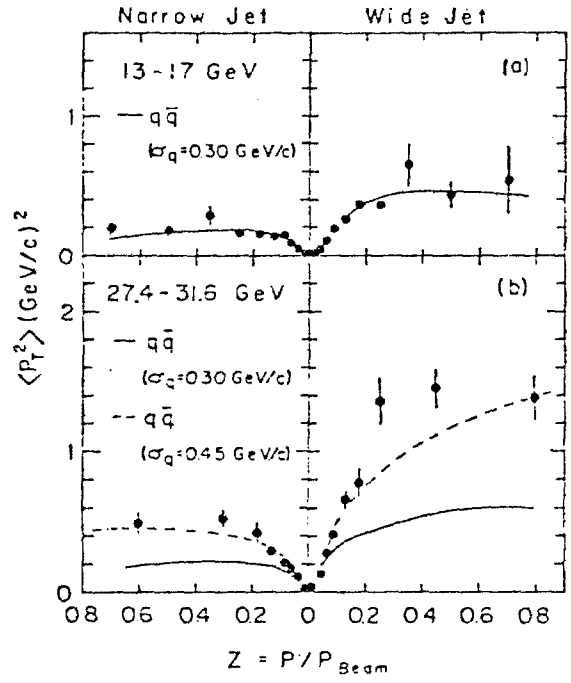
Narrow Jet
Wide Jet
13 - 17 GeV
(a)
$q\bar{q}$
(σ_q=0.30 GeV/c)
27.4 - 31.6 GeV
(b)
$q\bar{q}$
(σ_q=0.30 GeV/c)
$q\bar{q}$
(σ_q=0.45 GeV/c)
$\langle P_T^2 \rangle$ (GeV/c)^2
Z = P/P$_{Beam}$

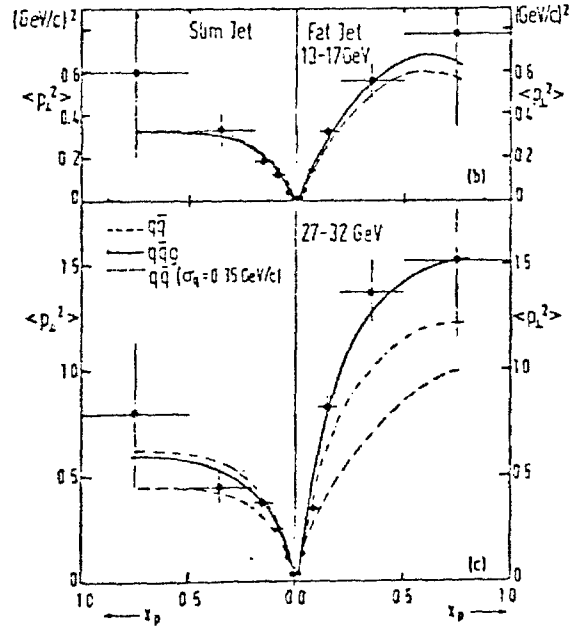
(GeV/c)^2
Slim Jet
Fat Jet
13-17GeV
(b)
$\langle p_\perp^2 \rangle$
$q\bar{q}$
$q\bar{q}g$
$q\bar{q}$ (σ_q=0.15 GeV/c)
27-32 GeV
(c)
x_p

Fig. 4

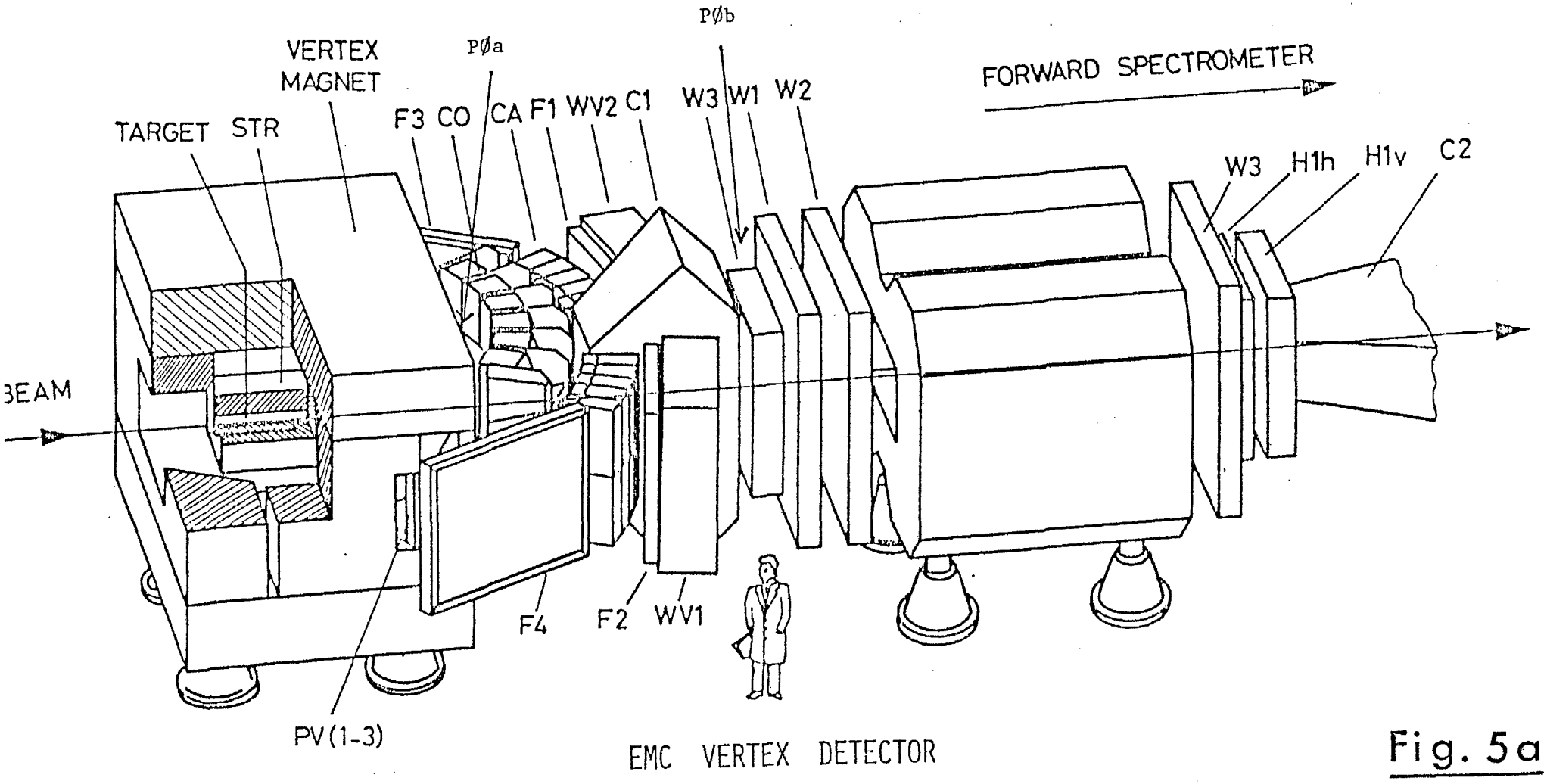
PØb
VERTEX
MAGNET
PØa
FORWARD SPECTROMETER
TARGET
STR
F3
CO
CA
F1
WV2
C1
W3
W1
W2
W3
H1h
H1v
C2
BEAM
F4
F2
WV1
PV(1-3)
EMC VERTEX DETECTOR

Fig. 5a

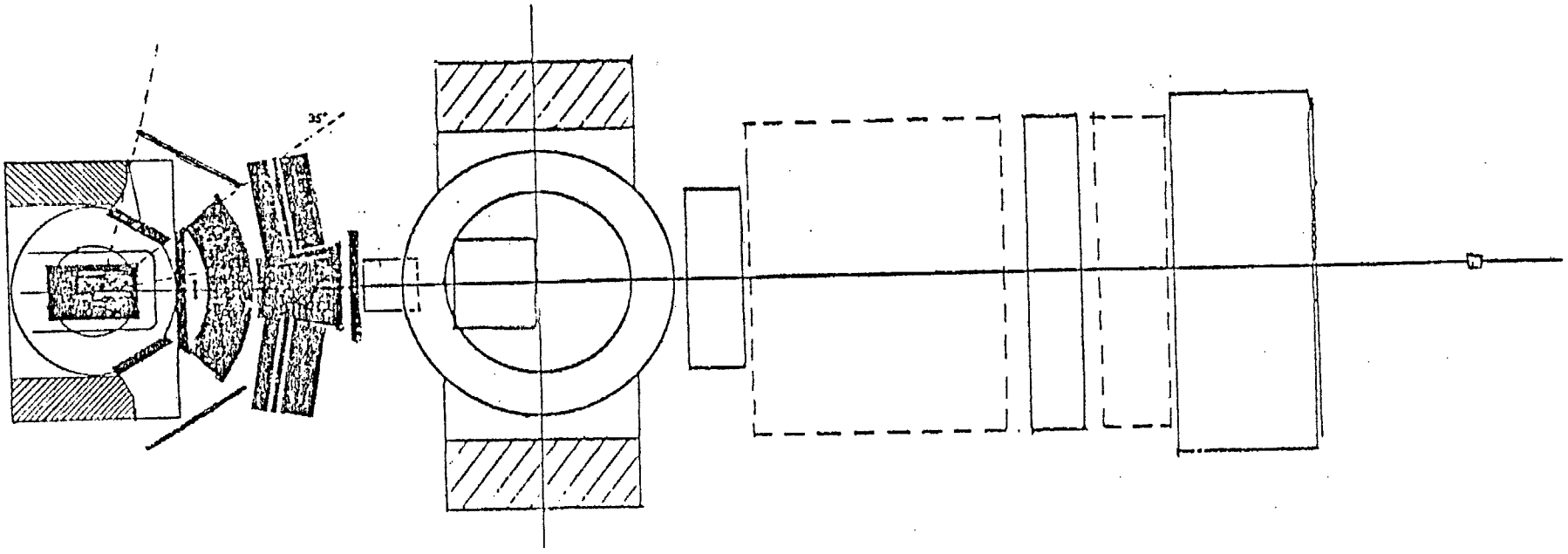

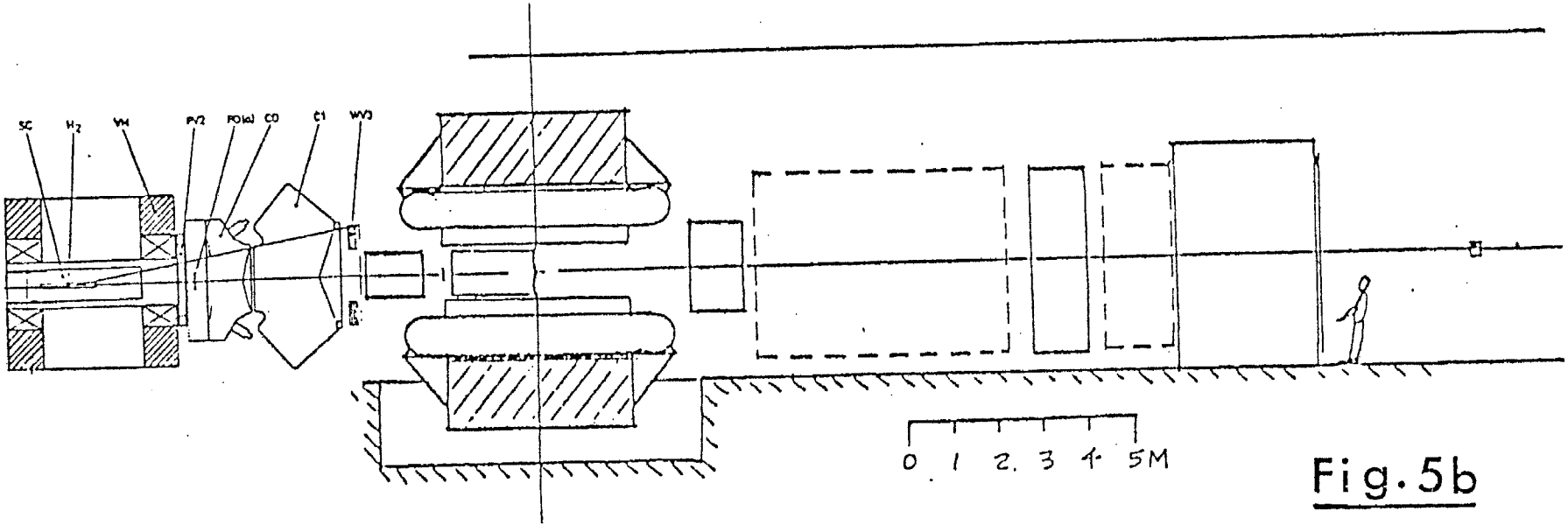

Fig. 5b

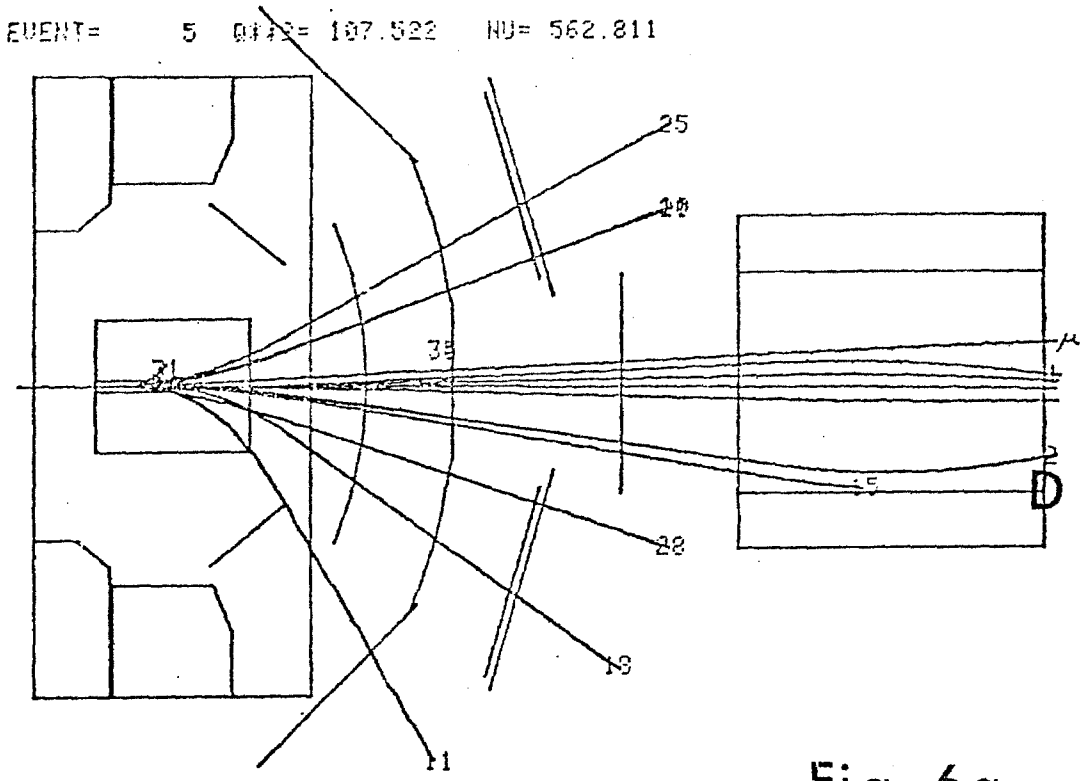
EVENT= 5 Q**2= 107.522 NU= 562.811
25
35
28
13
11
D

Fig. 6a

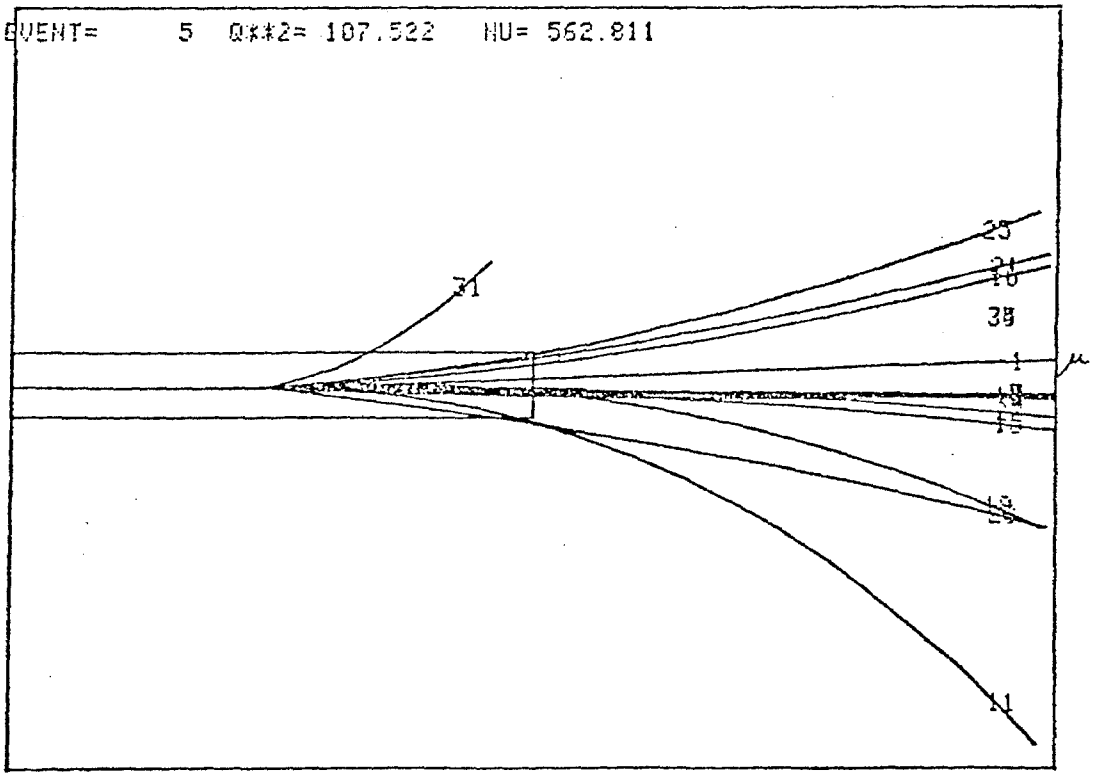
EVENT= 5 Q**2= 107.522 NU= 562.811
25
35
11

Fig. 6b