FERMILAB-Proposal-0559

STUDY OF CONSTITUENT SCATTERING IN HADRONIC COLLISIONS

P. Franzini

Columbia University

B. C. Brown

Fermilab

R. J. Engelmann, G. Finocchiaro, R. J. Fisk, M. L. Good,

A. S. Ito, H. Jostlein, D. M. Kaplan,

R. D. Kephart, J. Lee-Franzini and R. L. McCarthy

State University of New York at Stony Brook

May 1977

Spokesman:
R. L. McCarthy
Department of Physics
State University of New York
Stony Brook, New York 11794
(516) 246-4079

24pgs.

Study of Constituent Scattering in Hadronic Collisions

We propose to study constituent scattering in hadronic collisions. Instead of attempting to detect jets, we restrict our attention to single particle production at very high $x_\perp$ in each arm of a double arm spectrometer. Present experimental facts and theoretical ideas lead us to believe that we will observe quark-quark scattering, essentially directly.

The apparatus to be used is a double arm magnetic spectrometer with Čerenkov counters to identify hadrons. The experimental configuration is very similar to that of E-494 except for the following changes:

1. Hydrogen target
2. Larger aperture
3. Incident π^+, π^- and p beams

We request 1200 hours of data aquisition and 200 hours to tune the experiment.

INTRODUCTION - GENERAL METHOD

In order to motivate our discussion, we quote the views of Field and Feynman[1] regarding quark fragmentation (jet formation). We consider a quark emerging from a hard scatter. The quantity z represents the momentum fraction which a hadron possesses relative to the quark momentum.

(Quoted from Ref. 1.)

> The theoretical picture which we use to guide our thinking is this. As the quark q (presumably colored) leaves the others the forces responsible for confinement build up an ever larger field until pairs of quarks q, $\bar{q}$ are produced which breaks down the field. The many quarks and antiquarks produced now gather into color singlets, $q\bar{q}$ and qqq forming hadrons. These ideas are discussed by Bjorken[2] and analyzed in a one-dimensional model by Casher, Kogut, and Susskind.[3] of course these hadrons such as N*, ρ may undergo further rapid disintegration until they become the more stable hadrons which we observe (i.e. π, K, N).
>
> The field (color field), being independent of the flavor of q, makes new pairs in a manner independent of q. The original quark finds itself in one of the hadrons near the higher end of the momentum distribution, in particular if z is near 1 so that the hadron carries most of the available momentum that hadron contains the original quark. The lower z hadrons are distributed in a way that gradually becomes independent of q as z falls, and are ultimately uniform in rapidity ($\ln z$).

The new quark pairs are equally likely to be $\bar{u}u$ and $\bar{d}d$ - from isospin symmetry but SU_3 is not assumed. Thus if we suppose strange quarks have a higher intrinsic mass than non-strange, the rate of $\bar{s}s$ pair production by the field would be lower than $\bar{u}u$ or $\bar{d}d$ production. We disregard, for our purposes, the rare production of charmed quarks or other flavors.

Independently of the theories of Field and Feynman, this view is obviously reasonable. If a hadron has $x_\perp > .5$ it possesses over half the transverse momentum available in the center of mass. Thus its momentum fraction z relative to the fragmenting quark must be near 1. Hence, this particle is the only particle produced at high $p_\perp$ and it should contain the original quark.

PREDICTIONS - NAIVE QUARK MODEL

It is possible, using the ideas of Field and Feynman, to predict particle ratios at high $x_\perp$. They envision hadronic interactions at large $p_\perp$ as due to quark-quark elastic scattering. They assume that the quark-quark scattering cross section is independent of the quark identity so that particle ratios at very high $x_\perp$ can be predicted from the quark model. Field and Feynman use measured values for the quark distribution functions.[1] We simply indicate the wealth of predictions available using the naive[4] quark model. The valence quark content:

$\pi^+ = u\bar{d}$	$K^+ = u\bar{s}$	$p = uud$	$n = udd$
$\pi^- = \bar{u}d$	$K^- = \bar{u}s$	$\bar{p} = \overline{uud}$	$\bar{n} = \overline{udd}$

enables one to identify the outgoing hadrons in the following way. Suppose we wish to study the $\pi^+\pi^+$ to $\pi^+\pi^-$ ratio produced in pp collisions at high $x_\perp$. From the elastic scatter of a u and a u we cannot produce any π^- since π^- does not contain u. Thus restricting attention to π^+ or π^- we must produce $\pi^+\pi^+$. In accord with the preceeding ideas the probability of a u acquiring a $\bar{d}$ to form a π^+ equals the probability of a d acquiring a $\bar{u}$ to form a π^-.

p p	$\rightarrow$	π π
		1. $uu \rightarrow \pi_+\pi_+$
u u		2. $uu \rightarrow \pi_+\pi_-$
		3. $ud \rightarrow \pi_+\pi_+$
u u		4. $uu \rightarrow \pi_+\pi_+$
		5. $uu \rightarrow \pi_+\pi_-$
d d		6. $ud \rightarrow \pi_-\pi_+$
		7. $du \rightarrow \pi_-\pi_+$
		8. $du \rightarrow \pi_-\pi_-$
		9. $dd \rightarrow \pi_-\pi_-$

So $\pi^+\pi^+ : \pi^+\pi^- : \pi^-\pi^- = 4 : 4 : 1$

The particle ratios can be calculated. Furthermore for single particle production

$$\pi^+ : \pi^- = 12/6 = 2.0$$

Predictions from the naive quark model are given in Table 1. The Chicago-Princeton Group[5] has measured the single arm ratios $\pi^+ : \pi^-$ for pp and pn collisions and obtain good agreement for both predictions. (Their data fits the Field-Feynman prediction even better.) Besides confirming the quark model predictions in a rather stunning way, the Chicago-Princeton Group has also showed that the data does indeed approach the naive quark model prediction for $x_\perp \sim .5$. They show that $x_\perp$ and not $p_\perp$ is the relevant variable in accord with the ideas of Feynman[6]. Thus

to study constituent scattering we are best off at low s. This argument breaks down at very low s (with momentum~ mass of proton) since Feynman considers his hadrons all to have very large momentum.

We have emphasized the theories of Field and Feynman because of their simplicity, predictive power, and agreement with experiment. However, the importance of this constituent scattering study is not dependent on any particular theory. The ability to predict particle correlations at large $x_\perp$ should be an important requirement of any constituent theory. By studying correlations at large $x_\perp$ we study the quantum number flow in the basic constituent collision. The results should be of great interest.

EXPERIMENTAL ARRANGEMENT

In accord with the above ideas, we must set our thresholds near the following $P_\perp$ values ($X_\perp$=.5), according to incident momentum P_{LAB}.

P_{LAB} (GeV)	$P_{\perp}$ Threshold (GeV) = $.5 \times \frac{\sqrt{s}}{2}$
100	3.44
130	3.91
200	4.85
300	5.94
400	6.85

The table is based on NN collisions, but the πN case is about the same.

The rate at constant $X_\perp$ will increase rapidly with decreasing s. Hence, we choose to run at 130 GeV, the peak of the pion production curves for the new high intensity beam to be built in P-West[7]. The projected intensity is about 10^{10} pions per 10^{13} interacting protons.

We summarize the requirements for a good experiment to measure constituent scattering:

1. high luminosity
2. moderately low s
3. hydrogen - deuterium target
4. variety of species incident

The first two requirements imply that the experiment should be done at a fixed target accelerator, not a storage ring.

Our present experiment, E-494, is almost suited to the task right now. The desired changes are listed below in order of importance:

1. We must use a hydrogen (deuterium) target.
2. We must increase the aperture of each arm (see rate estimates). In addition, we should modify our apparatus to accept both charges in each arm. This will increase our acceptance and decrease systematic errors in charge ratio measurements.
3. We should use the new P-West beam. There π^+, π^-, p are available as incident particles.
4. We should improve the $P_\perp$ resolution of our trigger.

ADVANTAGES OVER JET EXPERIMENTS

1. By focussing attention on single particles at high $X_\perp$, we study quantum number flow in the basic constituent collisions. Jet experiments attempt to detect fragmentation products at low $P_\perp$ in addition to those at high $X_\perp$. The information gained by this additional effort is not directly relevant to the basic collision process.
2. By detecting only single particles we assign ourselves a well-defined task which we are sure we can carry out. Jet detection involves considerable difficulties because of the components at low $P_\perp$. It is difficult experimentally to even define a jet.
3. By using a relatively small solid angle per arm but with a large incident intensity we achieve a higher rate for the interesting high $X_\perp$ pairs than do the jet experiments (see rate extrapolation).

APPARATUS

The experimental plan is given in Figure 1. We show a design using similar apparatus to that of Experiment 494. This apparatus has been described in publications[8], so we mainly note the differences in the new experiment.

Target

The target is a liquid hydrogen (liquid deuterium) 2m in length (.33 interaction lengths).

Spectrometers

Each spectrometer axis is set at tan β = .120. (This is 90° in CM at P_{LAB} = 130 GeV. β = lab horizontal production angle.) By making full use of the magnet aperture and moving the magnets a factor of 2 closer to the target, compared with Experiment 494 the lab solid angle of each arm is increased by a factor of 9.28. The new aperture is specified by:

horizontal production angle tan β = .077 to .163

vertical production angle tan α = -.017 to +.017

In addition, due to the large target, the beam penumbra extends from tan β = .070 to .170.

The trajectories are measured by two sets of proportional wire chambers (3 planes each) placed at 7.3 and 15.5 m from the target in each arm (see Figure 2). An additional plane (drift chamber or PWC) at 21m measures the vertical position. Trigger scintillation counters are placed at 16.0 and 21.5 m from the target.

Particle Identification

The fraction of hadrons in the momentum band for full identification is shown in Figure 3 as a function of $P_{\perp}$. We also show the corresponding curve for E-494. The improvement in the new geometry is due to the larger lab production angle. We can reach the same $P_{\perp}$ at lower momentum.

The $\check{C}$ counters are 7.7m and 4.6m long respectively. The gases are He in $\check{C}_1$ and Ne-N_2 in $\check{C}_2$. Helium is required in the first counter in order to give us an appreciable acceptance for particle

identification at $P_\perp = 4$ GeV. Neon, for instance, would cut our single arm acceptance by a factor of 1.7 (and hence would cut our pair acceptance by a factor of 3). We are using such a Čerenkov system in E-494 and collect about 10 photoelectrons in $\check{C}_1$ per fast particle. This number is so low that we would not like to shorten $\check{C}_1$ further.

Hadron Calorimeter

The hadron calorimeter in each arm will be made either of inexpensive scintillator and steel or water (as in E-494). We have found in E-494 that good calorimeter resolution is not essential in a system with a good magnetic spectrometer. We do, however, plan to construct a hardware device which reconstructs a track's momentum on-line so that the magnetic spectrometer can be used in the trigger. In this way we hope to avoid writing a large number of tapes.

If a steel-scintillator calorimeter is used, we will make the first plate out of lead in order to absorb electromagnetic showers from the neutral beam. We do not anticipate that neutrons will be a problem since we are at 90° in CM and often have pions incident. (We will study this question further, however.)

Momentum Resolution

The design of our experiment follows that of E288 and E494, in which all detection devices are downstream of the magnets in order to withstand high beam intensities. Consequently our momentum resolution is dominated by the spot size of the pion beam (2mm RMS [7]).

We plan to run the magnets with a transverse momentum kick of 1 GeV. Thus

$$\frac{\delta p}{p} = \frac{2 \times 10^{-3} \text{m} / 5.6 \text{ m}}{1 \text{ GeV} / 40 \text{ GeV}} = 1.4 \% \text{ RMS.}$$

Including the contribution of other measurement errors we expect

$$\frac{\delta p}{p} = 1.7 \% \text{ RMS at } p_{\perp} \approx 4 \text{ GeV.}$$

RATE EXTRAPOLATION

Using data from E494, we can extrapolate to our expected rate at P_{Lab}=130 GeV with the new larger aperture. In Table II, $h^+h^- > 3.9$ denotes all pairs of hadrons with both $P_\perp > 3.9$ GeV. $\Delta\Omega^*$ is the center of momentum solid angle of each arm. The number of incident protons/hour is given by

$$10^{10} \text{ protons/pulse} \times 5 \text{ pulses/minute} \times 60 \text{ min./hour} = 3 \times 10^{12} \text{ protons/hour on target (E494)}$$

F. W. Büsser et al.[9] have shown that the conditional probability of finding a second high $P_\perp$ hadron (into a given solid angle above a minimum $P_\perp$) opposite a high $P_\perp$ trigger is roughly independent of s. Consequently we expect the pair rate to scale with the single arm rate as s is varied at constant transverse momentum. Since the single arm rate[5] is proportional to $(1-X_\perp)^9$, the pair rate at P_{Lab}=130 GeV for a given $P_\perp$ is expected to be

$$R_{130} = \frac{[(1-X_\perp)^9 \ (\Delta\Omega^*)^2] \text{ at 130 GeV}}{[(1-X_\perp)^9 \ (\Delta\Omega^*)^2] \text{ at 400 GeV}} \times R_{400}$$

We see in Table II that the predictions agree with the data for $h^+h^- > 3.4$, but may be <u>pessimistic</u> for $h^+h^- > 3.9$. If they are indeed pessimistic, we prefer to leave them so.

In calculating the rate in a new 130 GeV configuration we include the fact that pions are more efficient than protons[10] in producing particles at high transverse momentum. The improvement is a factor of 2.5 at $X_\perp$=.5 ($P_\perp$=3.9 GeV) and a factor 1.7 at $X_\perp$=.43 ($P_\perp$=3.4 GeV). This factor is relevant to the pion running in the new experiment. For proton running

we can turn up the intensity if necessary. We include this factor linearly since we assume that the conditional probability will remain roughly constant under the change from a proton beam to a pion beam. We also include an extra factor of 2 in the new configuration because both signs of charge are collected in each arm.

In calculating rates into the larger aperture we cannot simply multiply by the square of the solid angle ratio. The reason is that we have two-body kinematics, where the component of the "away" hadron's momentum (P_{out}) in the $\emptyset$-direction relative to the trigger must be limited (see Fig. 4). Indeed, the CCHK collaboration [11] finds that $\langle P_{out} \rangle = 0.53$ GeV. In the Θ - direction, however, we expect little correlation because the colliding quarks center of momentum frame may be different from the beam-target c.m.frame. So if we write

$$\Delta \Omega^* = \Delta(\cos\theta^*) \; \Delta\emptyset^*$$

we can square $\Delta(\cos\Theta^*)$ in calculating the effects of the larger aperture. The spread expected in $\emptyset^*$ is given by

$$\delta\emptyset^* \sim \pm \frac{\langle P_{out} \rangle}{3.9 \text{ GeV}} = \pm .136$$

The size of our expanded aperture in the c.m. is given by

$$\Delta(\cos\Theta^*) = 0.709 \qquad \text{and} \qquad \Delta\emptyset^* = 0.310$$

(The average $\Delta\emptyset^* \equiv \Delta\Omega^* / \Delta(\cos\Theta^*)$)

Note that $2\delta\emptyset^* \sim \Delta\emptyset^*$, so that our $\emptyset$ aperture has approximately the largest value for which the pair rate will vary as the square of the single arm acceptance.

For the rate calculation we use the factor $2/3(\Delta\Omega^*)^2$ instead of $(\Delta\Omega^*)^2$. To obtain the final rates, we multiply by $(.86)^2$ to account for $\check{C}$ acceptance at $P_\perp > 3.9$ GeV. (We assume the average $P_\perp$ is 4.3 GeV). For $P_\perp > 3.4$ GeV the $\check{C}$ acceptance is complete for particles above the magnetic threshold, but we must multiply by $(.8)^2$ to allow for differences in the magnetic acceptance between E494 and the new configuration.

	Number of Identified Pairs Expected in	
	1 hour	500 hours
+- pairs each $X_\perp > .5$	1.1	550
+- pairs each $X_\perp > .43$	6.6	3300

We would collect similar numbers of ++ and -- identified pairs simultaneously.

Because of the correlation arguments just presented, we can estimate the ratio of our acceptance to the acceptance of jet experiments for the interesting high $X_\perp$ pairs. As an example of a jet experiment we take the CERN SPS experiment NA3. Their acceptance is given by[12]

$$\Delta(\cos\theta^*)_{NA3} = 1.34 \quad \text{and} \quad \Delta\phi^*_{NA3} = \frac{\pi}{2}$$

$$\frac{\text{Our Acceptance}}{\text{Acceptance NA3}} = \left(\frac{.709}{1.34}\right)^2 \left(\frac{.310 \times 2}{\pi}\right) = .055$$

Since NA3 plans to run at 10^7 incident particles while we propose to run at 10^{10} per pulse, we have ~ 55 times their sensitivity for high $X_\perp$ pairs.

SINGLE ARM RATES

According to the previous discussion, in changing between E494 and the configuration of this proposal, the single arm cross section will drop by a factor of 13 for $P_\perp > 3.4$ GeV. The center of mass single arm solid angle increases by a factor of 3.4 so we expect the single arm rate for $P_\perp > 3.4$ GeV to drop by a factor of 3.8. To the extent that single arm background is proportional to the high $P_\perp$ rate, this background will decrease in the new configuration.

However, it is probably safer to discuss background extrapolations in the lab. The important background consists of low momentum particles which confuse the PWC. In E494 this background started to become serious at $\sim 4 \times 10^{10}$ incident protons /second, a factor of 4 higher than the P-West pion intensity. From our E494 running at 200 GeV(compared with 400 GeV), we estimate that the low $P_\perp$ rate in the E494 aperture drops by a factor of 1.55 between 400 GeV and 130 GeV. Extrapolating to the larger horizontal production angle and larger vertical aperture, the singles rates are expected to increase by a factor

$$\frac{1}{1.55} \times \frac{1}{2.61} \times 4.85 = 1.2$$

This is quite satisfactory since we started with a safety factor of 4.

PROPOSED RUNNING TIME

We request 1200 hours of data acquisition divided as follows:

Reaction	hours	
π^- p	250	
π^- d	250	
π^+ p	250	
π^+ d	250	
p p	100	front porch
p d	100	front porch
	1200	total

The π^- data (500 hours) would be suitable as a first run. We request 200 hours of front porch running(130 GeV) with 3×10^{10} primary protons incident on our hydrogen target in order to perform a clean proton measurement. This can then be used to separate the effects of π^+ and p in the nominal π^+ beam.

RESPONSIBILITIES

Because of the increased aperture, all of the detection devices except the upstream PWC will have to be rebuilt. Since we have built similar devices in the past, however, we believe we can carry out the task. We do hope to borrow some equipment. We note that the only development project is the hardware reconstruction device. This device is not vital, but would be a great aid to the experiment.

We request from Fermilab:

Magnets- The E288/494 magnets exist.

Target - liquid hydrogen (2 m)

Prep electronics- the E288/494 allotment

CDC 6600 time- standard treatment

Rigging- We will need rigging assistance in assembling the hadron calorimeters.

REFERENCES

1) R. D. Field and R. P. Feynman, "Quark Elastic Scattering as a Source of High Transverse Momentum Mesons", CALT-68-565, to be published in Phys. Rev.

2) J. D. Bjorken, informal remarks at the New York Academy of Science Conference on Recent Advances in High Energy Physics, New York, 15-17 March, 1973.

3) A. Casher, J. Kogut, and Leonard Susskind, Phys. Rev. Letters 31, 793 (1973).

4) Some of these predictions have been mentioned publicly by many people. We do not know of a written reference.

5) D. Antreasyan et al., P.R.L. 38, 112 (1977).

6) R. P. Feynman, Photon-Hadron Interactions, W. A. Benjamin, Inc. (1972).

7) B. Cox et al., p-West High Intensity Secondary Beam Area - Design Report, Dec. 2, 1976.

8) D. C. Hom et al., Phys. Rev. Letters 37, 1374 (1976)

9) F. W. Busser et al., Nuclear Physics B106, 1(1976)

10) G. Donaldson et al., Phys. Rev. Letters 36, 1110 (1976)

11) M. Della Negra et al., submitted to Nuclear Physics B.

12) Experiments at CERN in 1976, CERN - Service d'Information Scientifique, and SPS Proposal #24

TABLE I

PARTICLE RATIOS FROM THE NAIVE QUARK MODEL AT HIGH $x_\perp$

$pp \to \pi\pi$		$\pi^+\pi^+:\pi^+\pi^-:\pi^-\pi^-=4/4/1$	$\pi^+:\pi^-=12/6$
	KK	$K^+K^+:K^+K^-:K^-K^-=4/0/0$	$K^+:K^-=\infty$
	pp	$p^+p^+:p^+p^-:p^-p^-=9/0/0$	$p^+:p^-=\infty$
$pn \to \pi\pi$		$\pi^+\pi^+:\pi^+\pi^-:\pi^-\pi^-=2/5/2$	$\pi^+/\pi^-=9/9$
	KK	$K^+K^+:K^+K^-:K^-K^-=2/0/0$	$K^+/K^-=\infty$
	pp	$p^+p^+:p^+p^-:p^-p^-=9/0/0$	$p^+/p^-\ \infty$
$\pi^+p \to \pi\pi$		$\pi^+\pi^+:\pi^+\pi^-:\pi^-\pi^-=4/2/0$	$\pi^+/\pi^-=10/2$
	KK	$K^+K^+:K^+K^-:K^-K^-=2/0/0$	$K^+/K^-=\infty$
	pp	$p^+p^+:p^+p^-:p^-p^-=3/3/0$	$p^+/p^-=9/3$
$\pi^+n \to \pi\pi$		$\pi^+\pi^+:\pi^+\pi^-:\pi^-\pi^-=2/4/0$	$\pi^+/\pi^-=8/4$
	KK	$K^+K^+:K^+K^-:K^-K^-=1/0/0$	$K^+/K^-=\infty$
	pp	$p^+p^+:p^+p^-:p^-p^-=3/3/0$	$p^+/p^-=9/3$
$\pi^-p \to \pi\pi$		$\pi^+\pi^+:\pi^+\pi^-:\pi^-\pi^-=0/4/2$	$\pi^+/\pi^-=4/6$
	KK	$K^+K^+:K^+K^-:K^-K^-=0/2/0$	$K^+/K^-=4/3$
	pp	$p^+p^+:p^+p^-:p^-p^-=3/3/0$	$p^+/p^-=9/3$
$\pi^-n \to \pi\pi$		$\pi^+\pi^+:\pi^+\pi^-:\pi^-\pi^-=0/2/4$	$\pi^+/\pi^-=2/10$
	KK	$K^+K^+:K^+K^-:K^-K^-=0/1/0$	$K^+/K^-=2/3$
	pp	$p^+p^+:p^+p^-:p^-p^-=3/3/0$	$p^+/p^-=9/3$
$\bar{p}p \to \pi\pi$		$\pi^+\pi^+:\pi^+\pi^-:\pi^-\pi^-=2/5/2$	$\pi^+/\pi^-=9/9$
	KK	$K^+K^+:K^+K^-:K^-K^-=0/4/0$	$K^+/K^-=6/6$
	pp	$p^+p^+:p^+p^-:p^-p^-=0/9/0$	$p^+/p^-=9/9$
$\bar{p}n \to \pi\pi$		$\pi^+\pi^+:\pi^+\pi^-:\pi^-\pi^-=1/4/4$	$\pi^+/\pi^-=6/12$
	KK	$K^+K^+:K^+K^-:K^-K^-=0/2/0$	$K^+/K^-=3/6$
	pp	$p^+p^+:p^+p^-:p^-p^-=0/9/0$	$p^+/p^-=9/9$

TABLE II: Rate Extrapolation

Lab Momentum (GeV)	400	300	200	130	This Proposal 130
CM Solid angle (mster)	64.1	62.4	56.5	47.3	220.
$h^+h^- \geqslant 3.9$ GeV/hour measured	.9±.1	1.2±.4	.3±.2	—	—
predicted	—	.49	.13	.02	1.5
$h^+h^- \geqslant 3.4$ GeV /hour measured	5.0±.3	4.2±.8	1.1±.4	—	—
predicted	—	3.0	1.0	.21	10.3

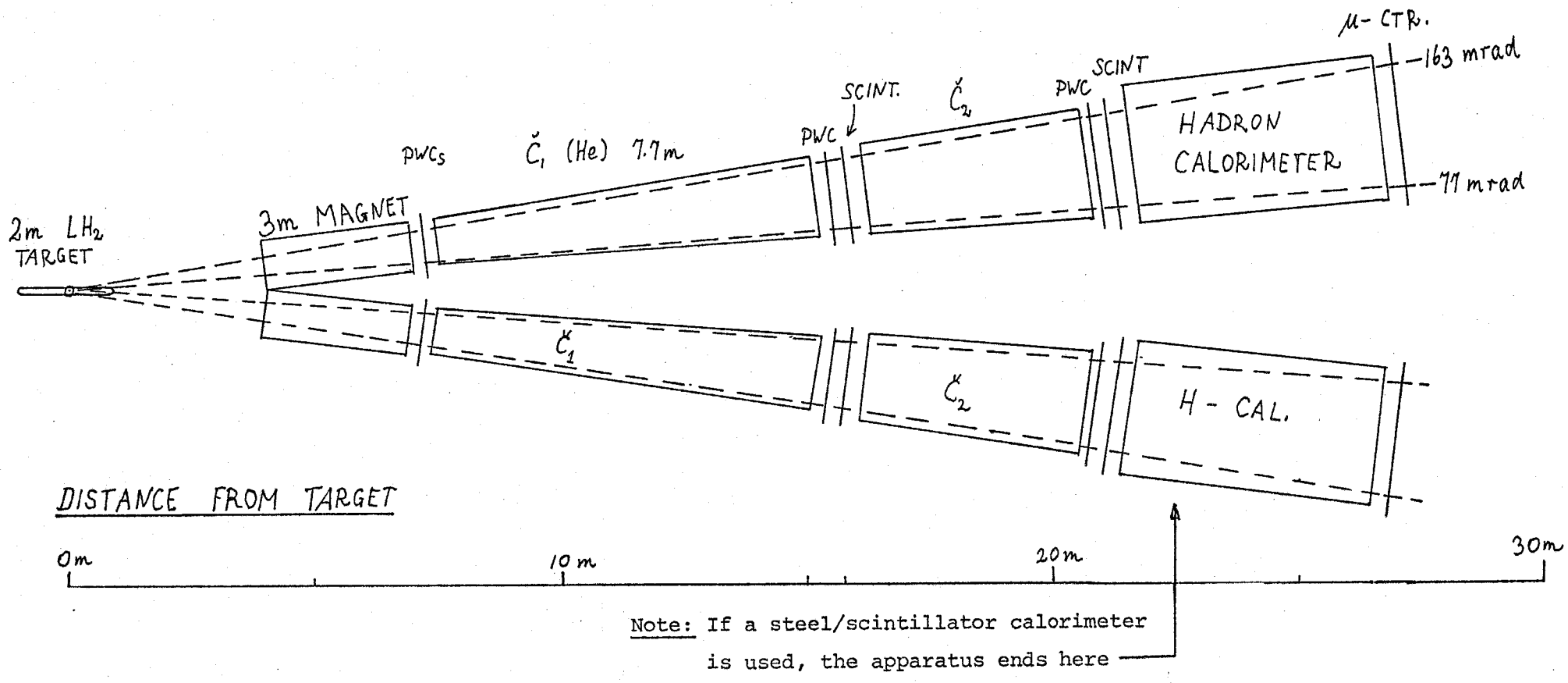

Figure 1 PLAN VIEW OF APPARATUS.

559-20

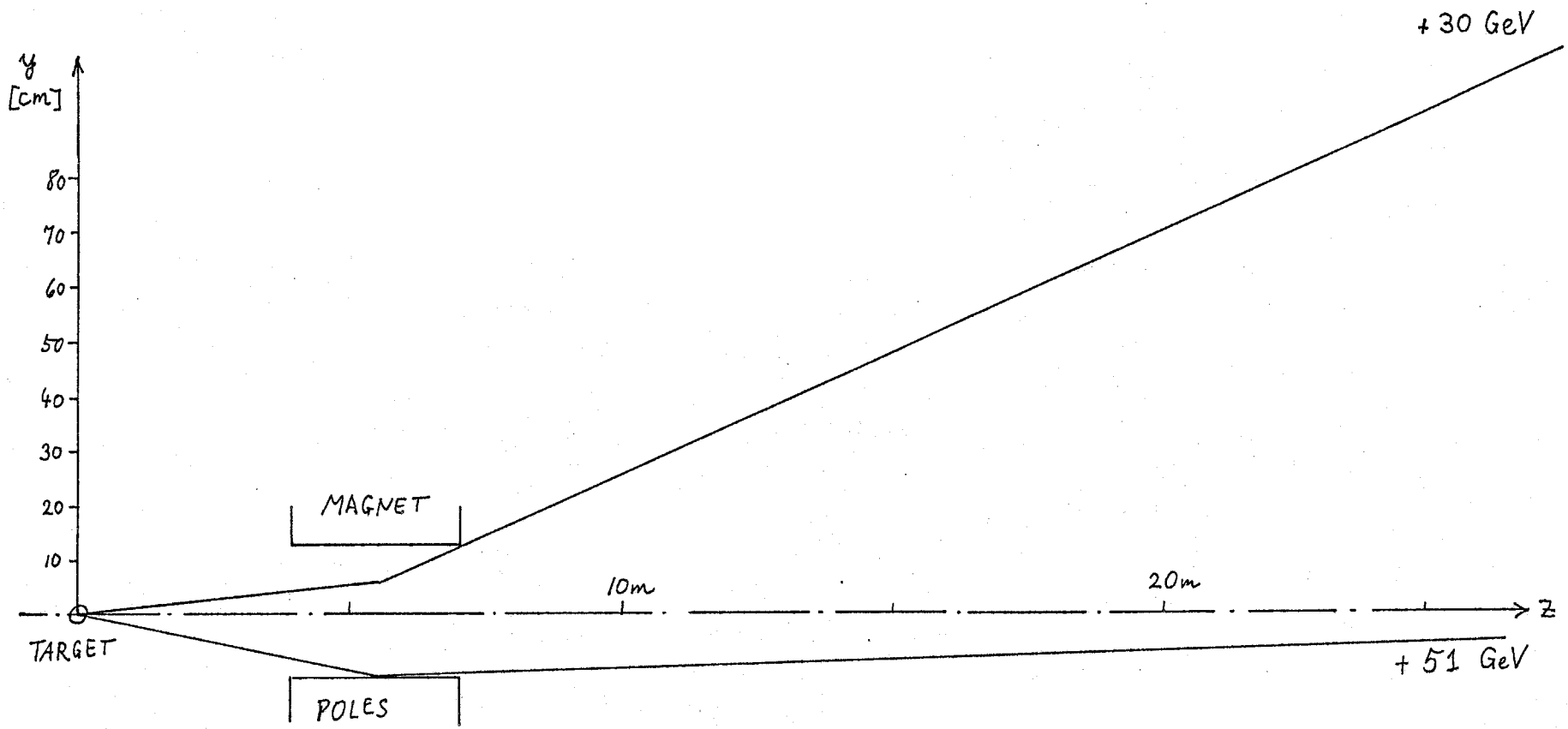

FIG. 2 VERTICAL APERTURE

559.01

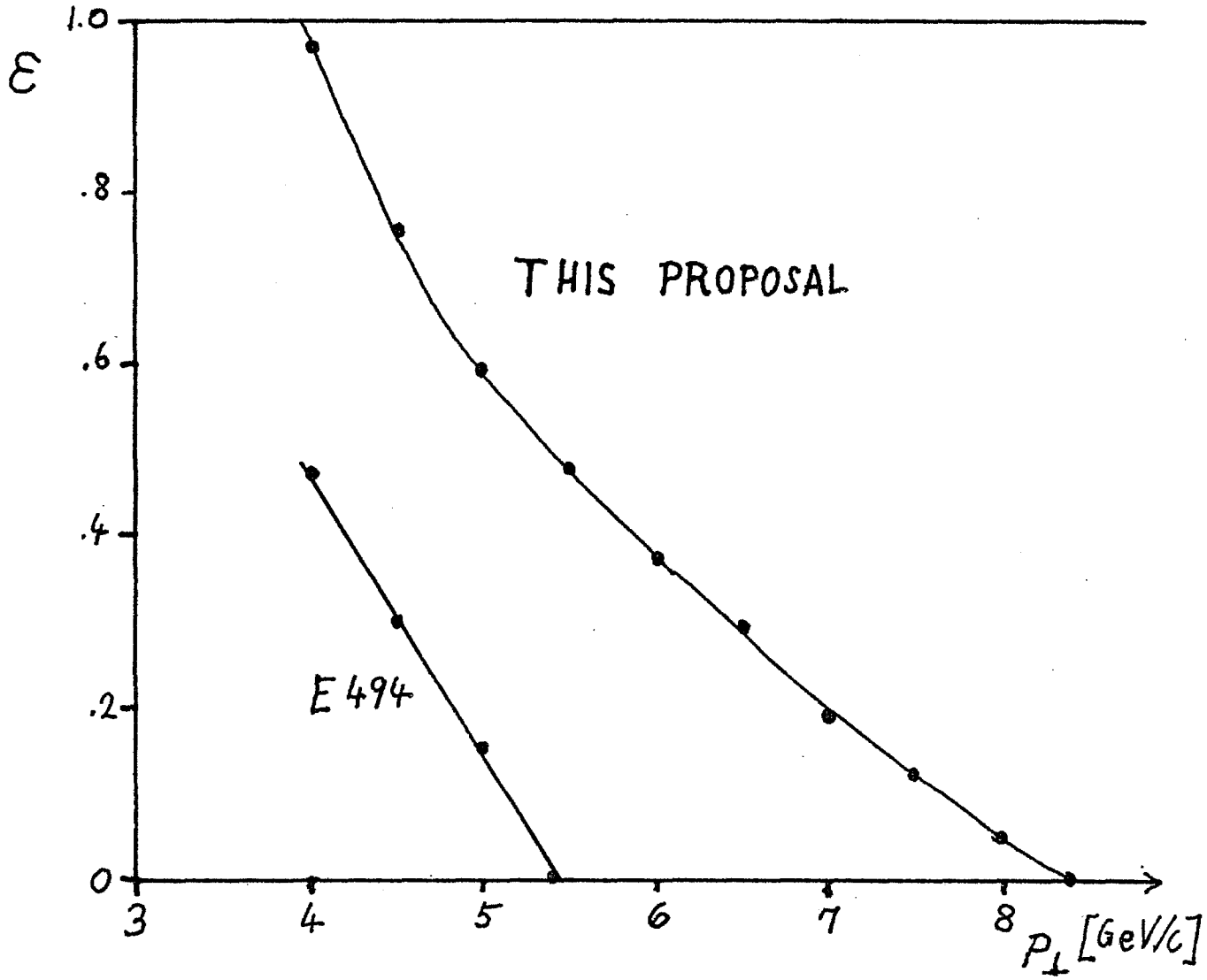

FIGURE 3 Fraction ε of hadrons that can be identified.

559-23

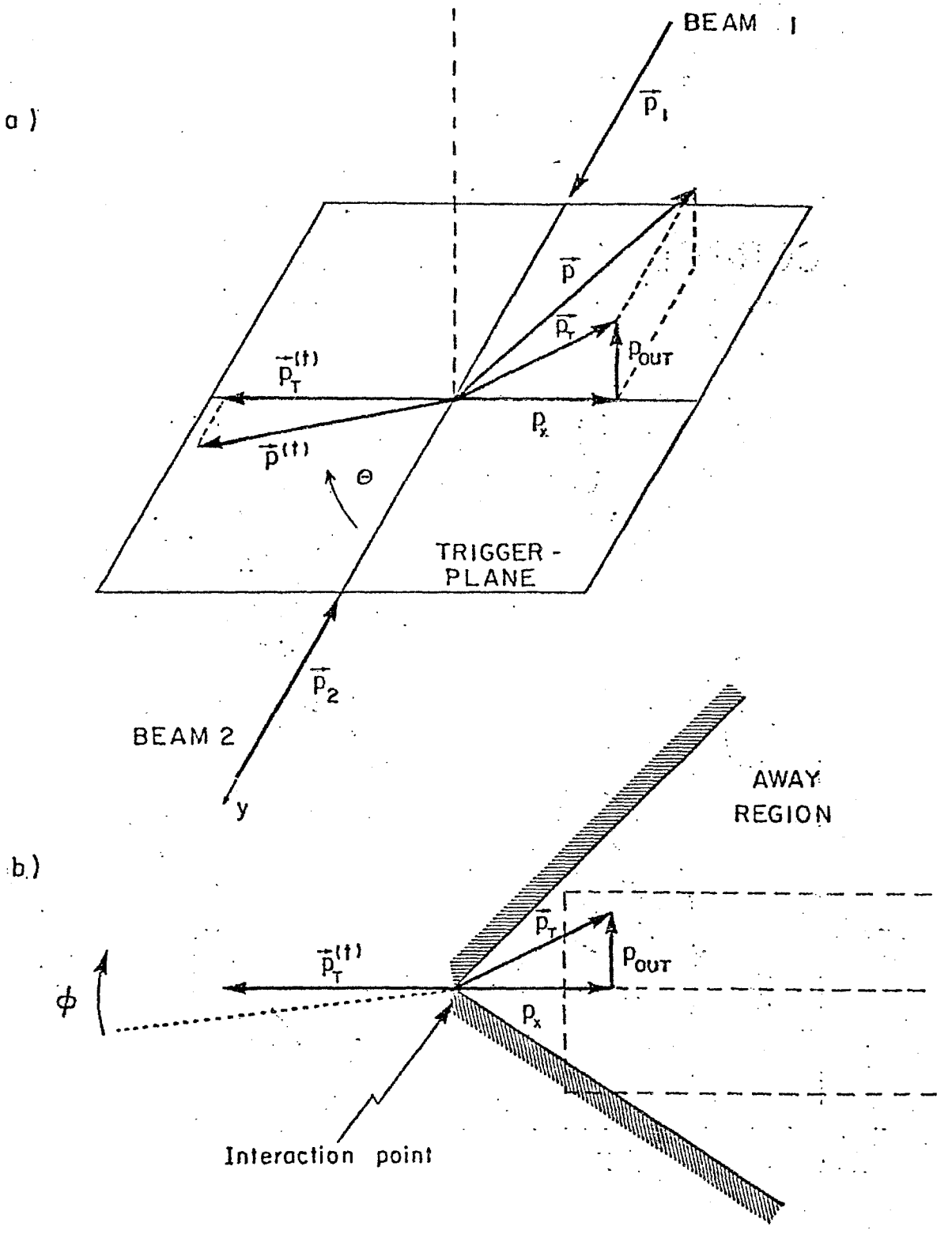

from reference 11

FIG. 4