FERMILAB-Proposal-0557

Fermilab Proposal No. 557
Scientific Spokesman:
E. Malamud
Fermilab
Batavia, Illinois 60510
FTS 370-4003
Commercial - (312) 840-4003

PROPOSAL TO STUDY HADRON JETS WITH THE CALORIMETER TRIGGERED MULTIPARTICLE SPECTROMETER

C. Bromberg
California Institute of Technology
Pasadena, California

and

V. Ashford, B. Brown, H. Haggerty, and E. Malamud
Fermi National Accelerator Laboratory
Batavia, Illinois

and

R. Abrams, H. Goldberg, S. Margulies, D. McLeod,
and J. Solomon
University of Illinois
Chicago Circle
Chicago, Illinois

and

A. Dzierba, and D. Petersen
Indiana University
Bloomington, Indiana

and

A . Kuznetsov, B. A. Morosov
Joint Institute for Nuclear Research
Dubna, USSR

and

R. G. Glasser
University of Maryland
College Park, Maryland

May, 1977

47 pgs

SUMMARY

We propose an experiment to study the structure of events containing clusters of high p_t particles ("jets"). The multiparticle spectrometer will be triggered by wide aperture calorimeters, placed on both sides of the beam and with more limited coverage above and below the beam. The spectrometer measures the momentum of most charged particles from 0° to 135° in the center of mass.

In order to more directly compare the data with the predictions of hard scattering models the experiment will be run with a hydrogen target and in the M6W beam where the incident hadron is identified by Cerenkov counters. A transition radiation detector will be added to the beam to identify K's at $\geq$ 300 GeV. This experiment is an extension and improvement on E-260:

1) The calorimeter and neutral detector will be rebuilt giving better energy and angular resolution and much larger acceptance.

2) The experiment will be run at higher flux. Together with the increased calorimeter acceptance it will be possible to study jets up to 8 GeV/c or higher.

3) The experiment will be run in the M6W beam line, upgraded to 400 GeV using superconducting (energy doubler/saver) magnets so the x_t dependence of the jet cross section can be determined and the π/p comparison done at 300 GeV (and higher when 1000 GeV protons are available).

4) A second Cerenkov counter (in the magnet) will be added, so π, K, p separation will be possible for some of the final state particles. Together with improved π^o detection and reconstruction of V's this will give considerable information on the quantum number flow in these events.

We will be able to disentangle photons, neutral hadrons and charged hadrons and thus study the jet structure on both trigger and away sides. The large solid angle coverage and improved spectrometer will also allow a detailed study of the forward going system. By simultaneously triggering on double jets we will enrich our sample of events with both jets fully contained in the calorimeters, thus allowing a detailed study of jet-jet angular correlations which may be related to the fundamental quark-quark scattering cross section $d\sigma/d\hat{t}$. Such a trigger will also eliminate the trigger bias with respect to the quark Fermi motion and allow a study of that distribution. Another interesting trigger that can be incorporated is to require the "global" sum of p_t to lie above a given threshold.

We will run primarily with a hydrogen target, but will also take data with heavier targets to determine the A dependence of the jet production cross section.

I. INTRODUCTION

The observation of a strong s dependence and an apparent power law transverse momentum spectrum in hadronic collisions with high transverse momentum secondaries have been widely interpreted as manifestations of the scattering of point-like structures within hadrons.[1,2] This, coupled with the earlier observations of point-like hadronic structure in lepton scattering gives rise to a possible theoretical unification of all hadronic production (ep, ee, γp, pp, etc.) in terms of the underlying "constituent" dynamics. Thus, in such a picture, hadronic production is seen as the materialization of scattered constituents (also called partons and frequently identified as quarks) which do not emerge themselves as free particles. This materialization, or "fragmentation", of the constituents results in a cluster, or "jet", of hadrons which together carry the constituents' momentum and have limited transverse momentum relative to the constituents' direction.

This picture is far from complete, but the main features have received strong experimental support particularly in the observation of scaling in deep inelastic lepton interactions,[3] jet production in e^+e^- annihilation,[4] the power law factorization of high p_t inclusive cross sections,[5] the observation of jet-like structure opposite a high p_t trigger at the ISR,[6] and the new results from E-260[7] (described in more detail in Section II) : observation of a large jet to single particle ratio, agreement with the coplanar double jet structure seen at the ISR,[8] and agreement of the fragmentation distributions with those seen in e^+e^- produced jets.

The exciting possibility that one is actually observing quark-quark scattering has motivated a very rapid development in both the theoretical and experimental understanding of high p_t phenomena. Nevertheless the existing data do not conclusively rule out all other interpretations. A much more detailed study of the entire structure of jet events will be necessary before the underlying dynamics are determined. Specifically, the s, p_t, and x_t structure of jet production needs to be known out to the highest p_t and over the widest s and x_t ranges. In addition the jet-jet angular correlation at high p_t needs to be studied, as well as the correlations with the forward going system. Such studies require detailed information about the jet momentum, direction, composition and structure, and the quantum number correlations among the jets and the incident beam and target. Such information can only be obtained with a calorimeter triggered wide aperture, symmetric, magnetic spectrometer with particle identification, different incident hadrons in the beam, and a hydrogen target.

The detailed comparison of jets produced in lepton-hadron and lepton-lepton collisions with those produced in experiments such as ours is fundamental to developing a unified picture of the scattering processes. Although important and detailed studies of hadron structure are being carried out in lepton-lepton and lepton-hadron reactions, the study of hard scattering of hadronic components is only possible in hadron-hadron collisions.

We propose to continue to study jet production started in E-260 with an upgraded version of the existing spectrometer and beam line.

II. SUMMARY OF RESULTS FROM E-260 AND NEW PHYSICS GOALS

Figure 1 shows the jet and single particle cross sections measured in p-Be collisions. The ratio of the jet to single particle cross section, R, is large: $100 \leq R \leq 500$.

E-260 also has 130 GeV data which will be used to get a rough idea of the jet x_t dependence. But the 130 GeV data are statistically limited and the acceptance is poor. In order to separately determine the p_t and s dependence, e. g., to obtain the n and m coefficients in the parameterization $p_t^{-n}\ (1 - x_t)^m$, it is necessary to have a high statistics run at an energy(s) higher than 200 GeV.

Preliminary E-260 results[9] show the cross section for jets produced on hydrogen by incident pions and protons is the same within statistics. The BNL-Cal Tech-LBL collaboration[10] have found that the ratio $pp \rightarrow \pi^o X$ to $\pi^- p \rightarrow \pi^o X$ decreases with increasing x_t. This result supports the hard scattering picture. It is important to extend jet cross section measurements to higher p_t and see if, as expected, π's become more effective in making jets than protons. These incident beam comparisons are most meaningful if a hydrogen target is used.

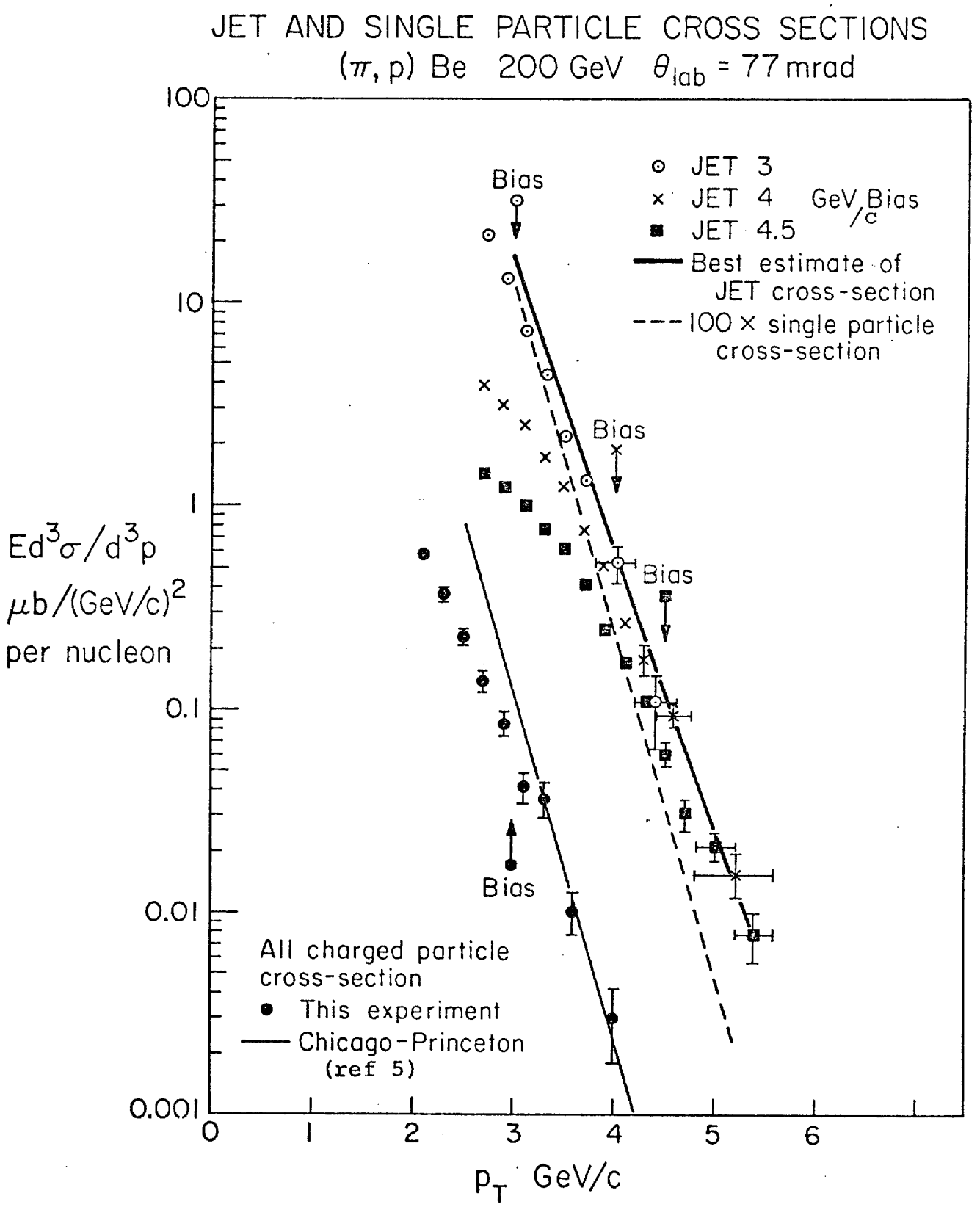
JET AND SINGLE PARTICLE CROSS SECTIONS
(π, p) Be 200 GeV θlab = 77 mrad
JET 3
JET 4
JET 4.5
GeV/c Bias
Best estimate of JET cross-section
100 × single particle cross-section
Bias
Bias
Bias
Bias
All charged particle cross-section
This experiment
Chicago-Princeton (ref 5)
Ed³σ/d³p
μb/(GeV/c)²
per nucleon
100
10
1
0.1
0.01
0.001
0
1
2
3
4
5
6
pT GeV/c

Fig. 1

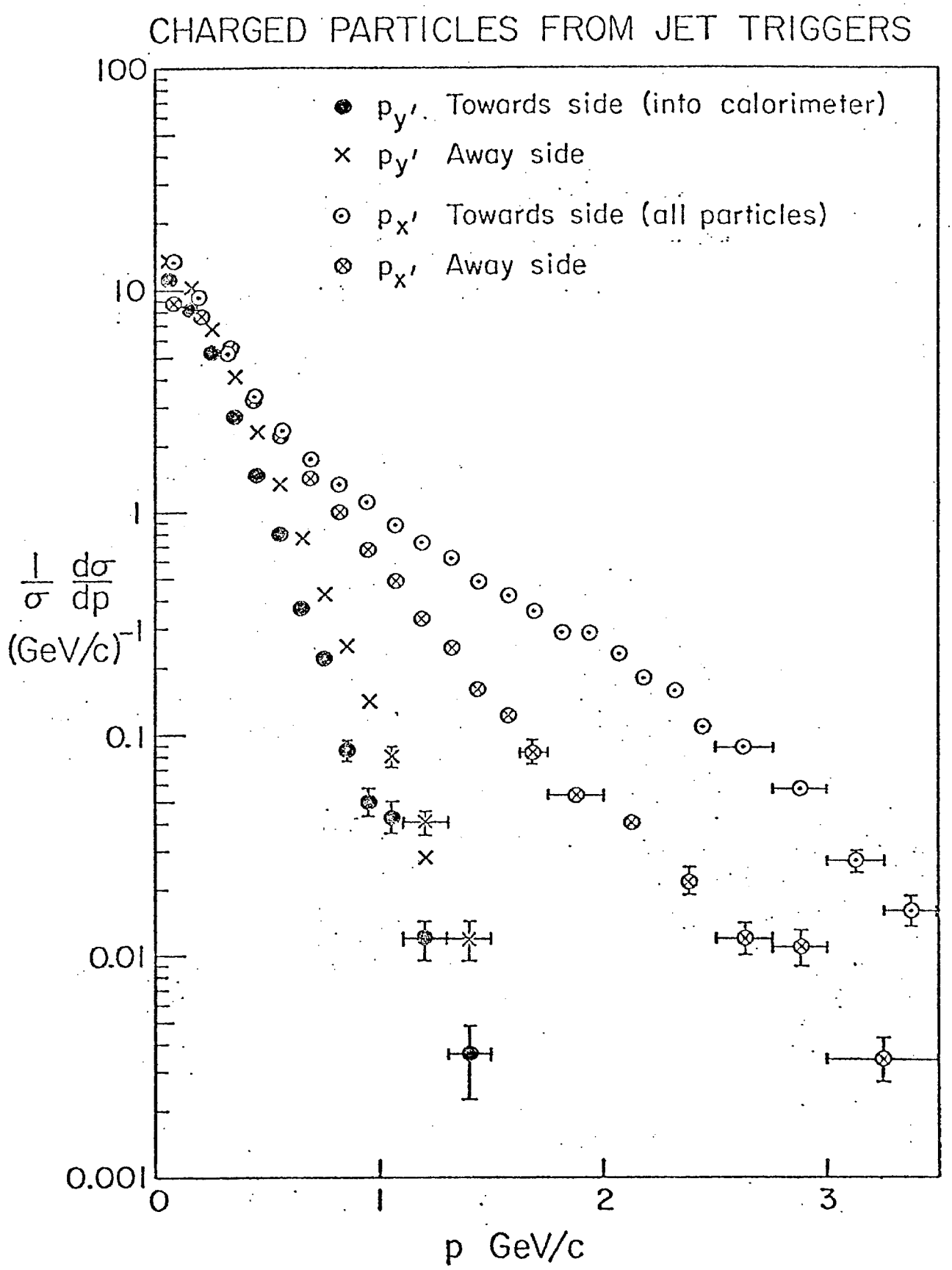
CHARGED PARTICLES FROM JET TRIGGERS
$p_{y'}$ Towards side (into calorimeter)
$p_{y'}$ Away side
$p_{x'}$ Towards side (all particles)
$p_{x'}$ Away side
100
10
1
0.1
0.01
0.001
$\frac{1}{\sigma}\frac{d\sigma}{dp}$ $(GeV/c)^{-1}$
0
1
2
3
p GeV/c

Fig.2

Figure 2 shows the distributions of particle momenta parallel (p_{in} or p_x') and perpendicular (p_{out} or p_y') to the principal axis of the event (projected perpendicular to the beam). High multiplicity Monte Carlo events, although showing a preferred axis do not exhibit the striking coplanarity shown in Fig. 2.

SPEAR jets have limited $< p_{out} > \simeq 300$ MeV/c. At p_t between 3 and 5 GeV/c such jets will have $< P_{in} > \simeq 800$ MeV/c and thus have $< \theta >_{jet} \simeq 20^{\circ}$. E-260 calorimeters are not much larger than this ($\pm 30^{\circ}$ from the calorimeter center.). Thus the acceptance falls rapidly when the jet vector is not centered on the calorimeter. If the hadron induced jets look like lepton induced jets then the E-260 trigger acceptance is good. If the hadron induced jets are larger, then the E-260 acceptance is not good and will impose a structure on what is observed.

The "fragmentation" distribution in the jet fragmentation scaling variable $z = p_{in}/p_t^{\ jet}$ on the trigger and away sides from E-260 are shown in figs. 3 and 4. The similarity of these distributions on the away side for both jet and single particle triggers supports the quark-quark scattering models[1] in preference to the constituent - interchange model.[2] In E-260 the acceptance for the away side jet is estimated to be about 0.7. The two jets are coplanar but due to parton motion in the hadron are not colinear. In addition as observed at the ISR[8] the away side jet tends to peak at 90° in the c.m. regardless of the angle of the triggering jet (or single particle). Thus it is important to increase the acceptance. This will be done by geometry changes and also by running at higher energy.

In E-260 the vertex resolution was about 2 mm. This allowed them to simultaneously take data from hydrogen and from the aluminum vacuum window and thus measure the A-dependence of the high p_t events. A preliminary result from E-260 is for jet production, $3 \leq p_t \leq 5$ GeV/c, the cross section per nucleon varies as $A^{1.3 \pm 0.1}$. This is similar to the A-dependence measured for production of single high p_t particles.[11] Thus some type of cumulative[12] or coherent[13] process is involved. It is important to measure this effect on other nuclei, and over a larger range of p_t, and also to compare the structure of jets produced from a hadron-nucleus collision with those produced in a hadron-hadron interaction. If this effect is due to some kind of rescattering within the nucleus one might expect to see an A-dependent asymmetry in the p_t of the trigger and away jets.

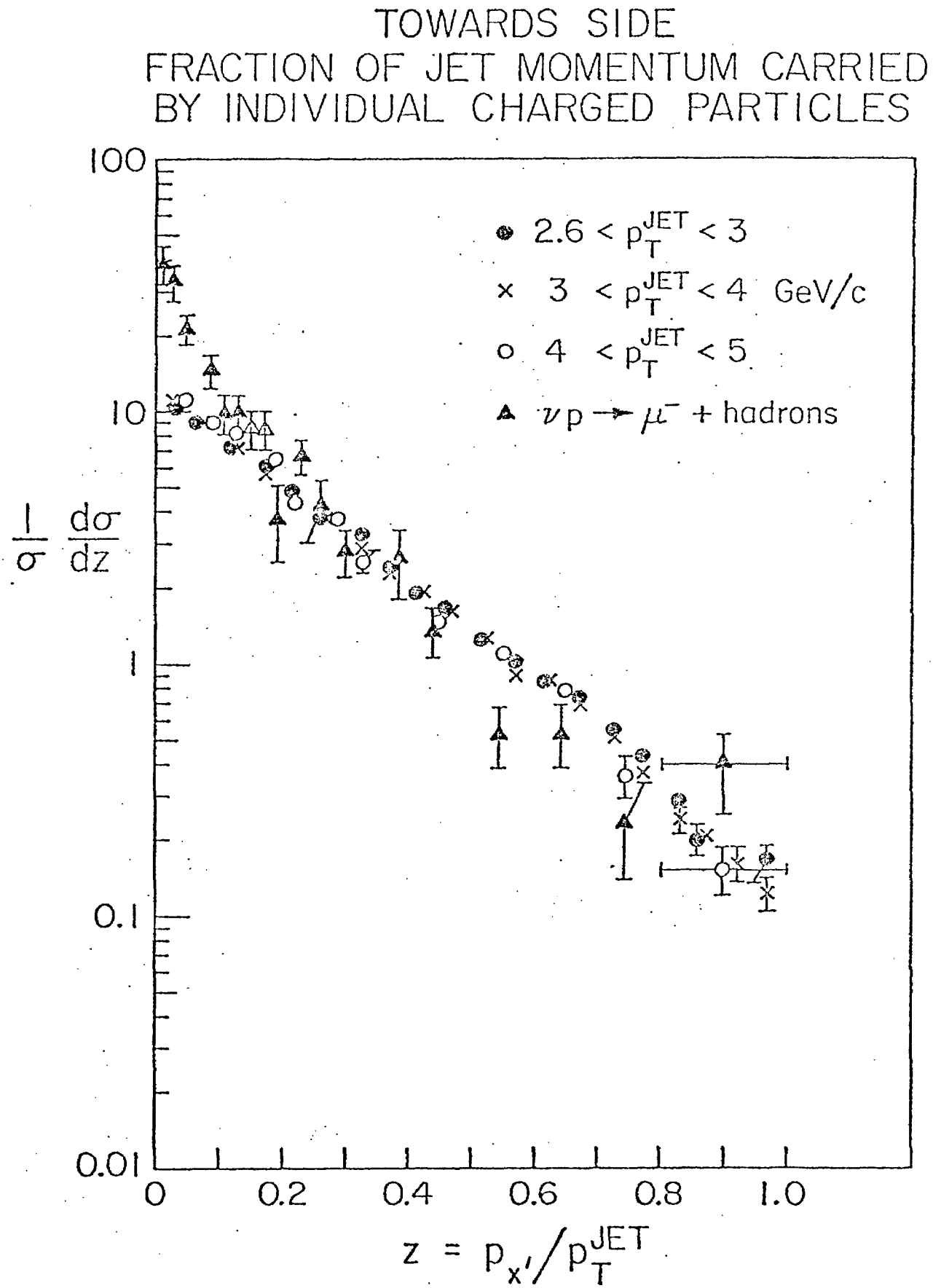
TOWARDS SIDE
FRACTION OF JET MOMENTUM CARRIED
BY INDIVIDUAL CHARGED PARTICLES
2.6 < p_T^{JET} < 3
× 3 < p_T^{JET} < 4 GeV/c
o 4 < p_T^{JET} < 5
▲ $\nu p \rightarrow \mu^- +$ hadrons
$\frac{1}{\sigma}\frac{d\sigma}{dz}$
100
10
1
0.1
0.01
0
0.2
0.4
0.6
0.8
1.0
$z = p_{x'}/p_T^{JET}$

Fig. 3

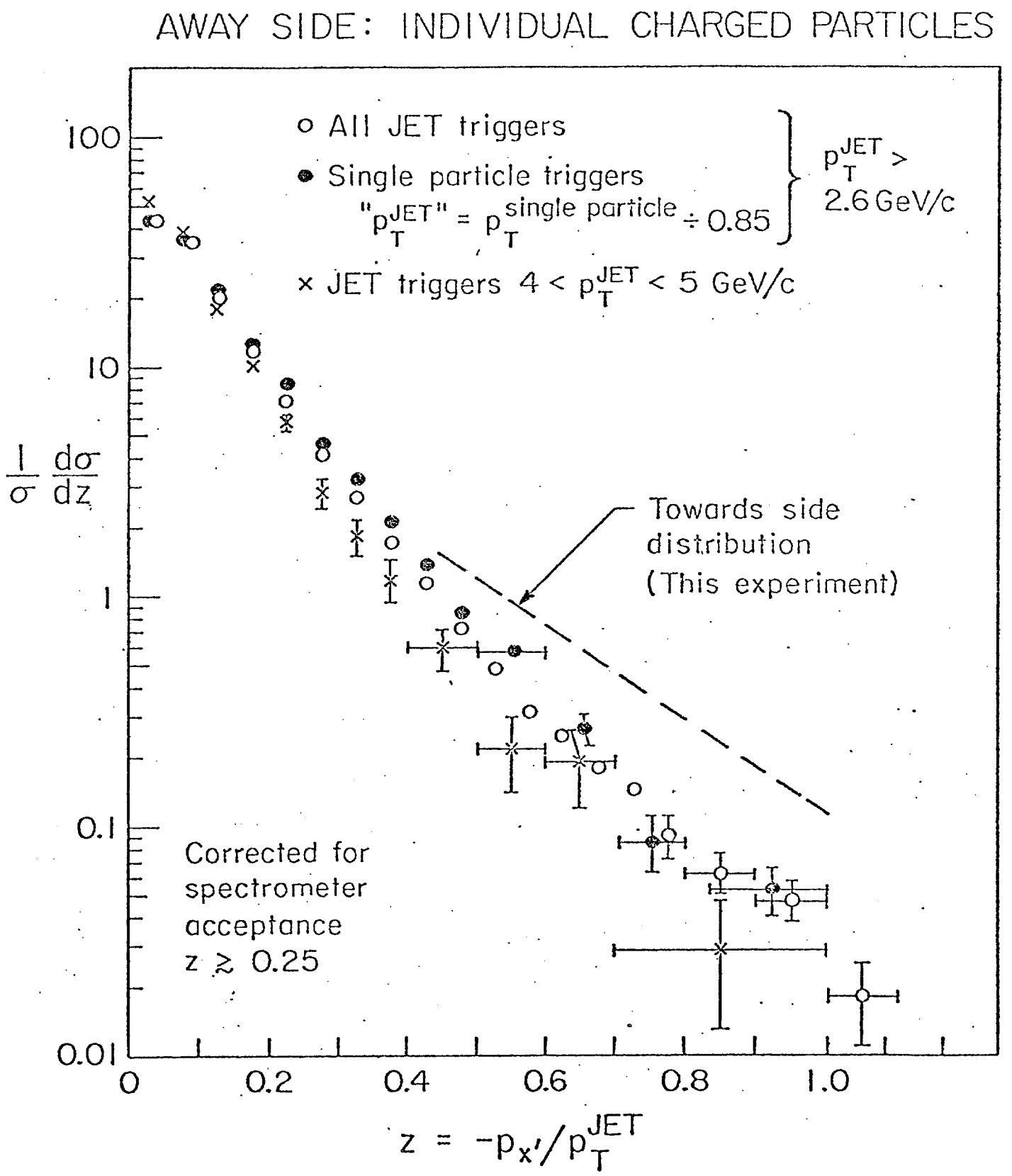
AWAY SIDE: INDIVIDUAL CHARGED PARTICLES
o All JET triggers
● Single particle triggers
"p_T^{JET}" = $p_T^{single\ particle} \div 0.85$
p_T^{JET} > 2.6 GeV/c
× JET triggers $4 < p_T^{JET} < 5$ GeV/c
Towards side distribution (This experiment)
Corrected for spectrometer acceptance $z \gtrsim 0.25$
$\frac{1}{\sigma}\frac{d\sigma}{dz}$
100
10
1
0.1
0.01
0
0.2
0.4
0.6
0.8
1.0
$z = -p_{x'}/p_T^{JET}$

Fig. 4

III. DESIGN FEATURES OF THE NEW EXPERIMENT

We use the results obtained in E-260 discussed in Section II to design a "second generation" hadron jet experiment that will add considerably to the information obtainable from E-260. More details on the apparatus are given in Section IV.

First, the solid angle and resolution of the calorimeter and neutral detection system will be improved by making the present calorimeter wider and closer to the target, and adding a wall of 21 cm x 21 cm blocks in front of the present calorimeter, thereby increasing the total to 50" of iron (7.4 absorption lengths). The new sections will have finer sampling. This coupled with the increased depth will improve the hadronic resolution over that in E-260 by about 1.7 and thus improve the identification of the neutral hadronic component of the jet. The neutral detector will consist of blocks and PWC's for localization of the gamma rays to ±5 mm. The block system will allow improved separation of multiple neutral particles since the calorimeter granularity is improved by a factor of 10. These improvements will result in a sharper p_t trigger and hence the calorimeter pulse height spectrum will be a closer representation of the true p_t spectrum. We estimate that the improvement in the ratio, real events above threshold/trigger, will be at least a factor of 2 over E-260.

An important feature of our new proposal is increased solid angle of the calorimeter trigger. It is important to verify

that the jet cross section does not change with acceptance. The increased calorimeter solid angle and improved kinematics at 400 GeV will increase the available x range for jet production.

The proposed geometry changes give the improved trigger acceptance illustrated in Fig. 5 . Figures 5a and 5b compare the acceptance of the 90° calorimeters at 200 and 400 GeV with the acceptance in E-260. Figure 5c shows the mean size of a jet calculated using $< p_{in} >$ and $< p_{out} >$. Figure 6 shows the spectrometer acceptance at 400 GeV.

We will add a new multicelled 2.1 meter long gas Cerenkov counter to occupy the magnet volume. By operating one counter at $(n-1) = 100 \times 10^{-6}$ (He-air or Neon) and the other at $(n-1) = 400 \times 10^{-6}$ (CO_2) we will have a useful range of unique particle identification (see Table III in Section IV.D). The beam hadron will be tagged with Cerenkov counters and a transition radiation detector to allow K identification up to the maximum energy. Together with π^{o} identification and a sample of V's, we will be able to study the quantum number flow in and between jets and correlate it to the beam type. Because the jets appear to have about 45% of their energy in neutral particles, improved neutral particle identification (both γ and hadronic) and resolution will greatly improve our ability to study jet quantum number structure.

In a hard scattering model when two quarks, one in the projectile and one in the target interact, the remaining hadronic matter goes forward and backward in the c.m. Thus the

557

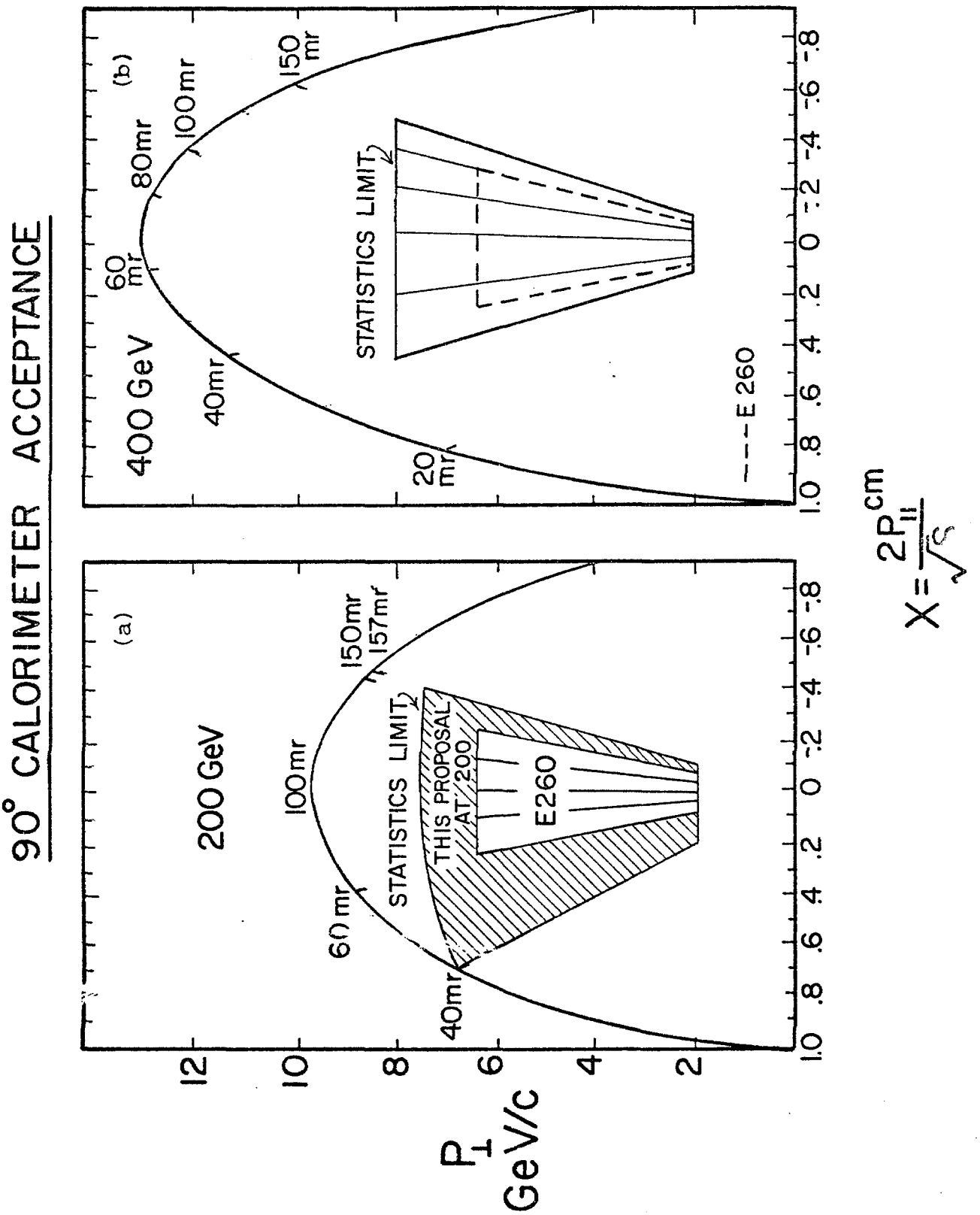
90° CALORIMETER ACCEPTANCE
(a)
200 GeV
100mr
60 mr
40mr
150mr
157mr
STATISTICS LIMIT
THIS PROPOSAL AT 200
E260
(b)
400 GeV
40mr
60 mr
80mr
100mr
150 mr
20 mr
STATISTICS LIMIT
E 260
$P_\perp$ GeV/c
$X = \frac{2P_{\parallel}^{cm}}{\sqrt{s}}$

Fig. 5

557

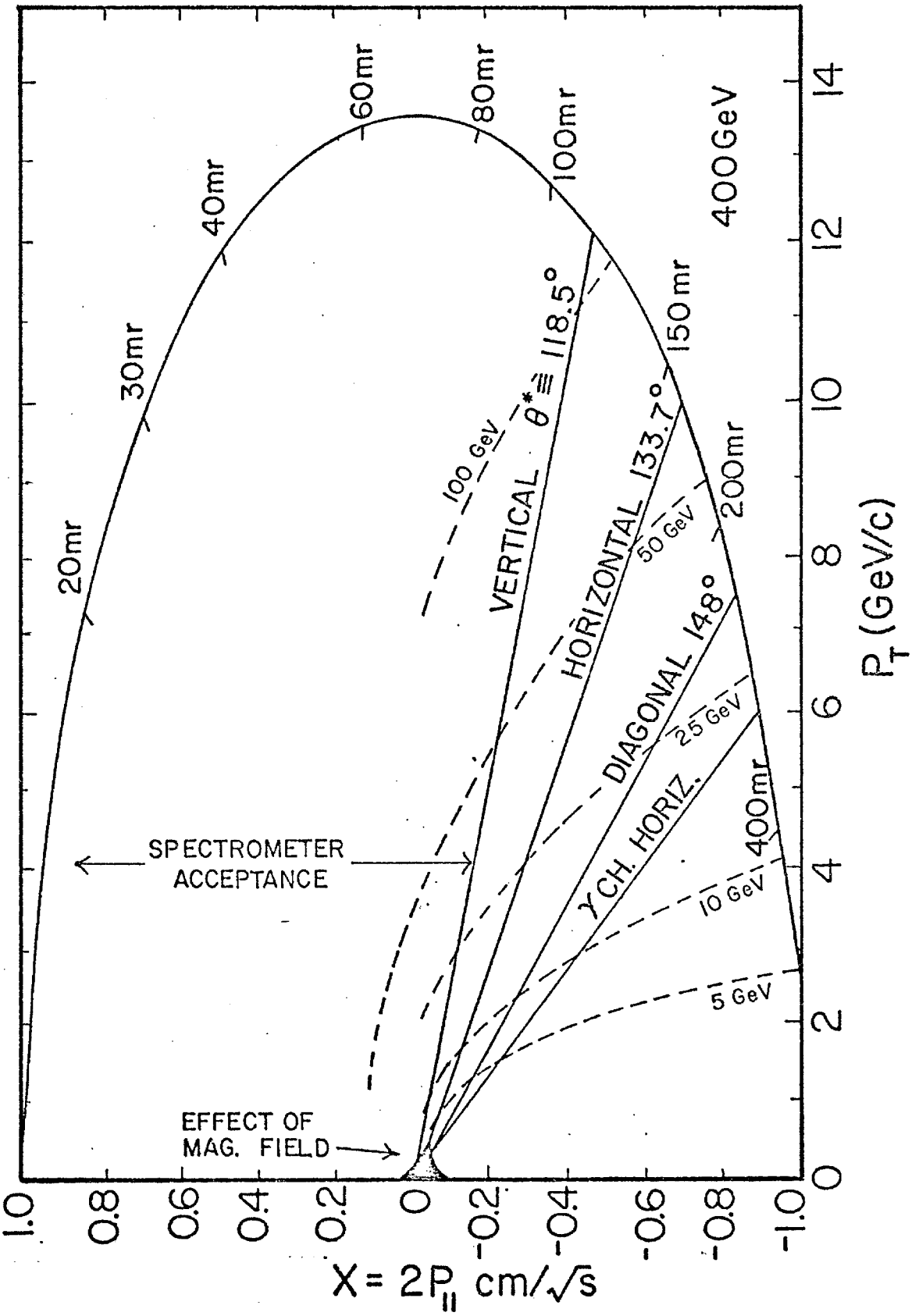

Fig. 6

SPECTROMETER ACCEPTANCE

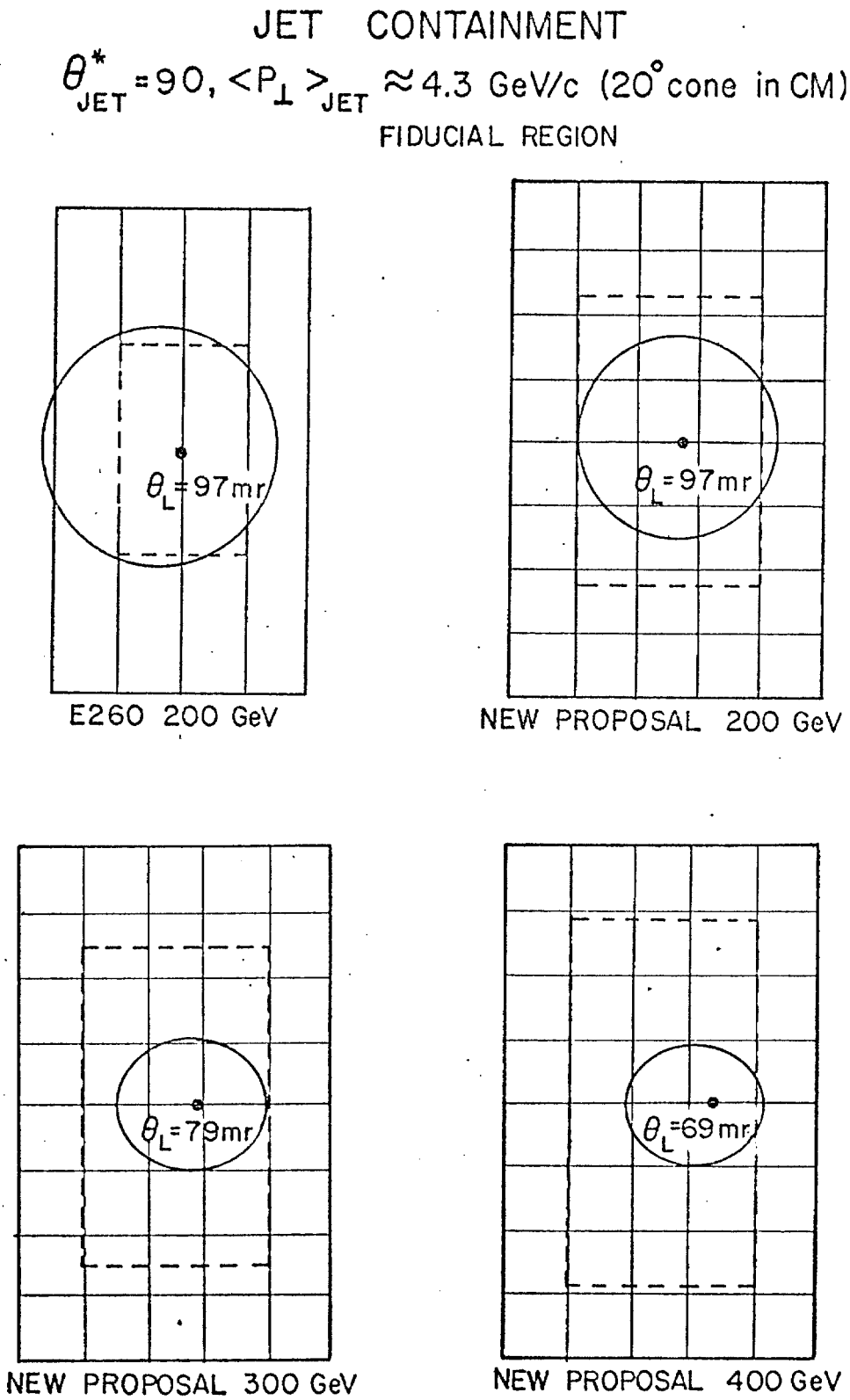
JET CONTAINMENT
$\theta^*_{JET} = 90$, $\langle P_\perp \rangle_{JET} \approx 4.3$ GeV/c (20° cone in CM)
FIDUCIAL REGION
$\theta_L = 97$mr
E260 200 GeV
$\theta_L = 97$mr
NEW PROPOSAL 200 GeV
$\theta_L = 79$mr
NEW PROPOSAL 300 GeV
$\theta_L = 69$mr
NEW PROPOSAL 400 GeV

Fig. 6

complete picture is one of four jets.[14] The MPS configuration used in E-260 had forward coverage, but after that run was finished extensive target instrumentation was installed for E-110. This will be available in a future high p_t experiment. Thus more complete knowledge of the multiplicity will be available and correlations of the jet with backward particles can be studied.

We will add several new PWC planes to the spectrometer to improve the acceptance for low momentum, wide-angle tracks and to bolster the spark chamber system in the forward direction. This will improve our ability to study the forward going system.

A major motivation for this proposal is to study the s-dependence of jet production. This will be possible with the upgrade of the M6 line with six superconducting doubler/saver dipoles. In E-260 the jet cross section appeared to follow the single particle cross section (i.e., $p_t^{-8}\ f(x_t)$); whether this continues to higher p_t is of the greatest interest. The jet cross section is expected to rise by as much as a factor of 15 between 200 and 400 GeV. With this increased rate we will be able to go to a considerably higher p_t (> 8 GeV/c).

We will run at 3×10^6/sec with an 18" hydrogen target. We will trigger simultaneously on single particles, single jets, double jets, a global p_t trigger, more than one threshold (prescaled), and interacting beam (also prescaled).

IV. APPARATUS

A. Geometry, Track-finding, and Software

The existing E-260 spectrometer is shown in Fig. 7a and the modified spectrometer for this proposal is shown in Fig. 7b.

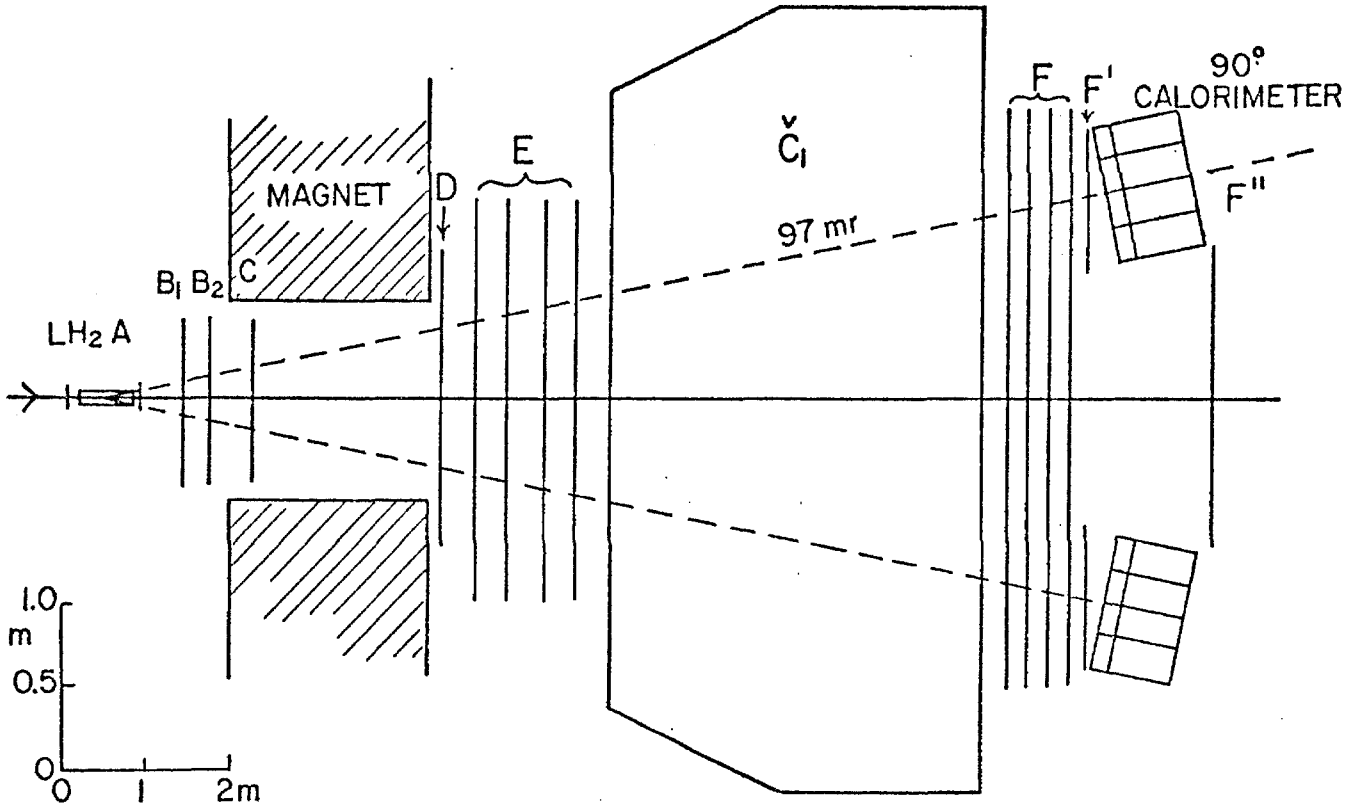

Fig. 7a EXISTING MPS(E260)

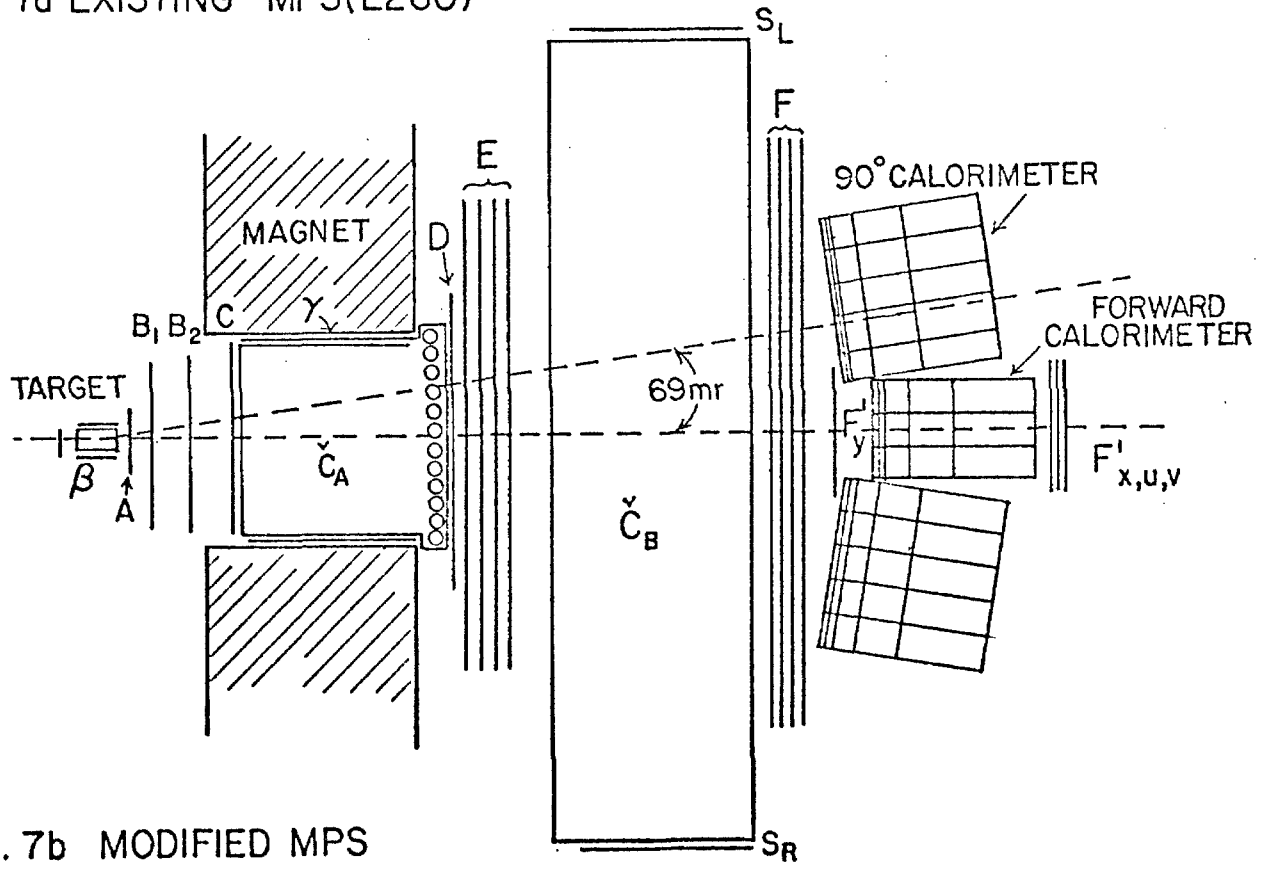

Fig. 7b MODIFIED MPS

We propose to:

1. Compress the E chambers to 0.7 m.
2. Lengthen the H_2 target to 18" (0.46 m).
3. Open the magnet to a 28.5" (0.7 m) gap by unbolting the top and bottom pole pieces.
4. The present D_x and D_y chambers will be moved to the sides to cover wide angle tracks. (new labels S_L and S_R). $D_{u,v}$, F'', $F'_{L,R}$ will be discarded.
5. Six new 2 mm spacing PWC's will be added:

   D_x, D_y, F'_x, F'_y, F'_u and F'_v.

   The D station will be 0.88 m x 1.25 m and the F' planes will all be 0.63 m x 0.63 m.
6. After the F spark chambers, the γ locating PWC's described below also give approximate charged particle positions for roadmaking.
7. Increase the calorimeter aperture by adding a 5th module to each present 90° calorimeter, by adding modules above and below the beam line, and by moving the calorimeters closer to the target by 2 meters.
8. Shorten C_1, now labeled C_B, to 2.3 m and move the target forward by 0.20 m.
9. Add a new Cerenkov counter, C_A, inside the magnet, between chambers C and D.

We do not propose at this time to modify the front end from its present E-110 configuration except for the substitution of a bigger target.

The total number of PWC wires in the present system is 5500. The new system we propose will have 6900. This does not require a second shift register controller.

Monte Carlo studies show that compressing the E-station chambers does not significantly alter the track-finding efficiency. The new 2 mm PWC's in the central region will allow narrower roads and enable us to cope with the higher multiplicity and closer tracks expected at 400 GeV and eliminate out of time tracks.

The basic on-line and off-line software used in E-260 will be retained. The average number of words recorded per event will increase from 1000 to 1500. It is estimated that approximately 300 hours of CDC 7600 time will be needed to process the data from this experiment. We can control this number somewhat by where we set our trigger thresholds. Effort spent in sharpening the trigger resolution will result in less total computer time needed for the same physics.

B. Calorimeters and Neutral Detection

The calorimeter system at the downstream end of the experiment consists of lead-scintillator sandwiches for γ and electron detection, with some interleaved wire proportional planes for better position resolution, and steel scintillator sandwiches for hadron detection. The system is much more extensive than in E-260, covering nearly all the forward aperture visible through the magnet. To as great an extent as possible, we wish to determine the locations and energies of all neutrals over

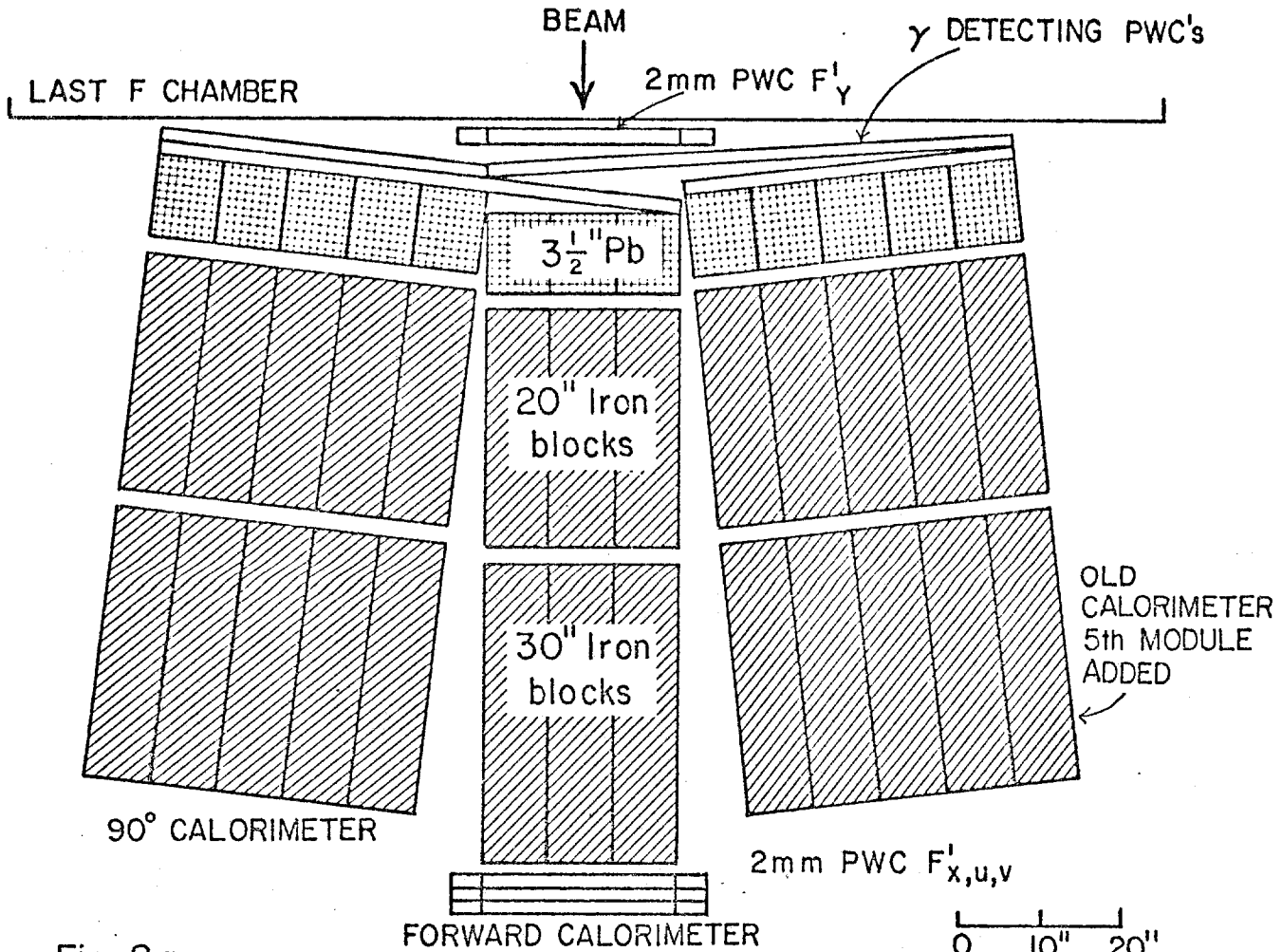

Fig. 8a

PLAN VIEW

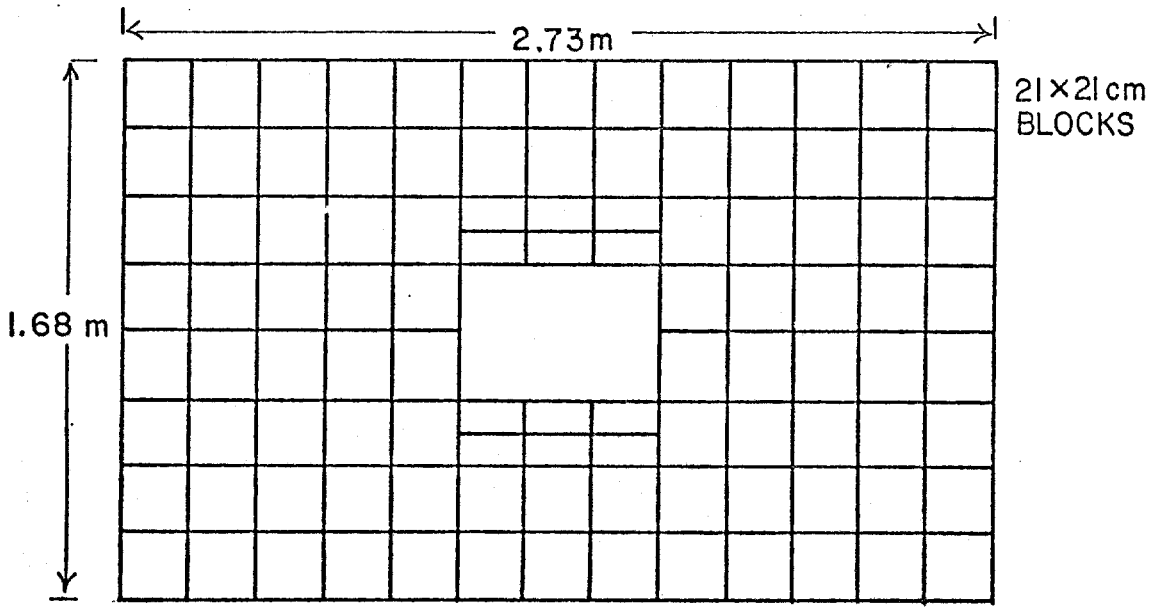

Fig. 8b ELEVATION LOOKING DOWNSTREAM

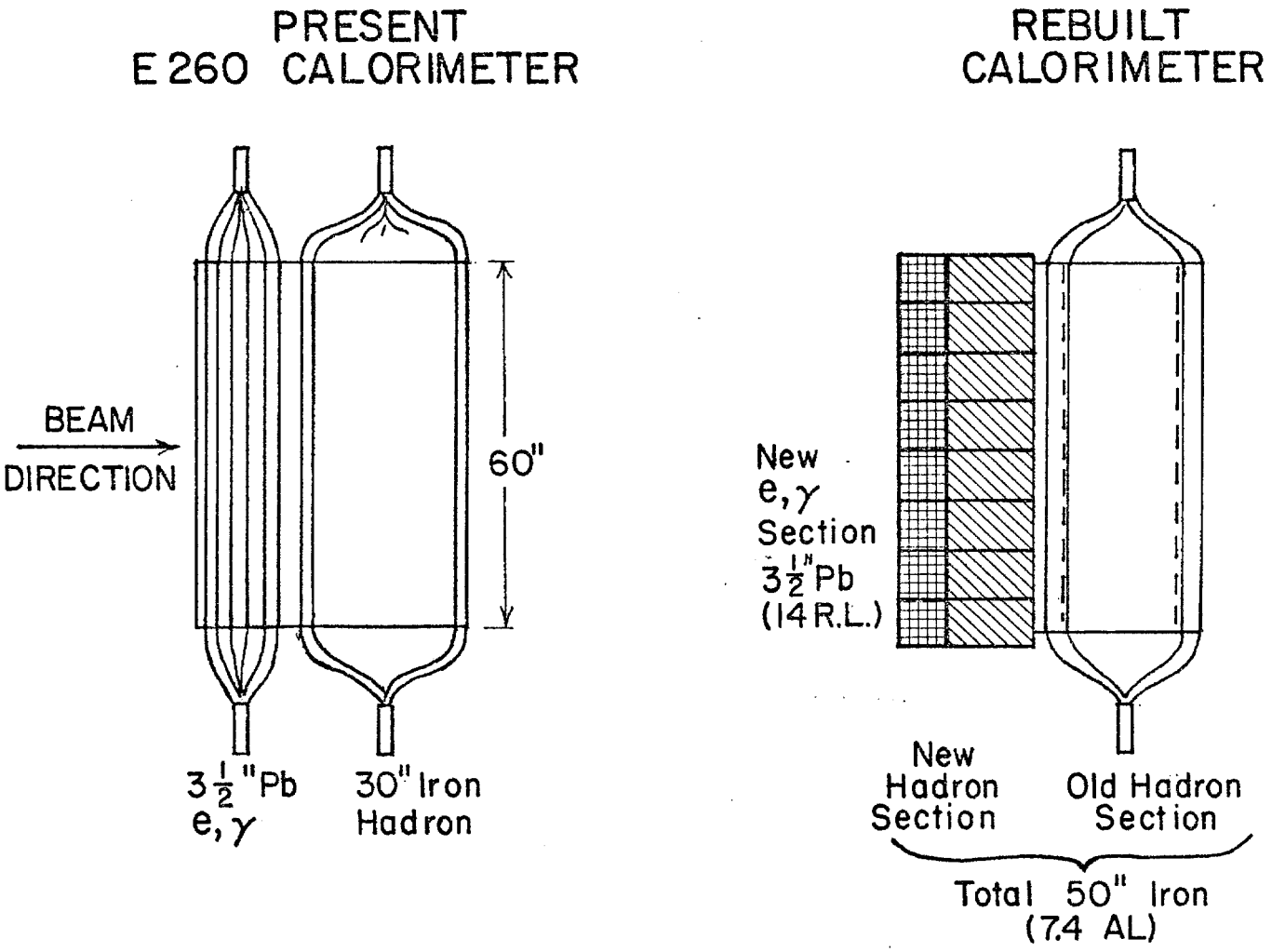
PRESENT
E 260 CALORIMETER
BEAM
DIRECTION
60"
3 1/2 "Pb
e, γ
30" Iron
Hadron
REBUILT
CALORIMETER
New
e, γ
Section
3 1/2" Pb
(14 R.L.)
New
Hadron
Section
Old Hadron
Section
Total 50" Iron
(7.4 AL)

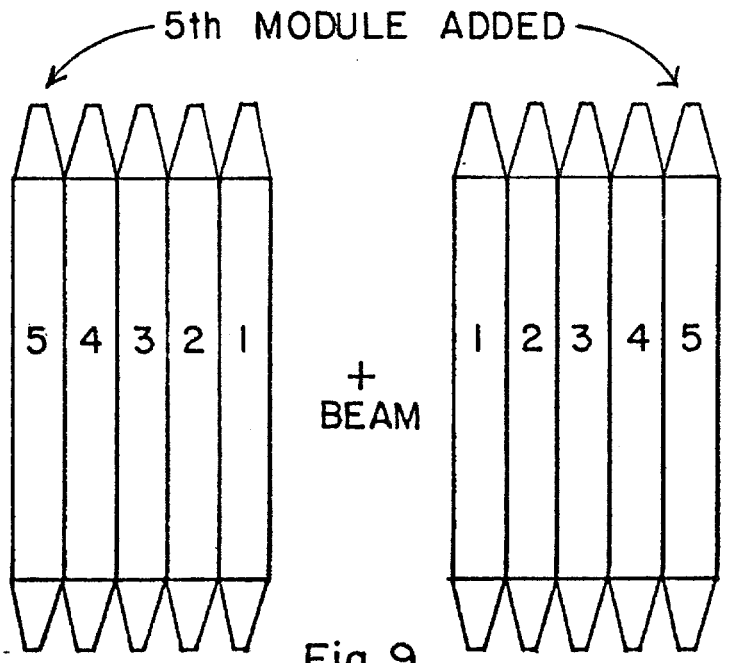
5th MODULE ADDED
5 4 3 2 1
+
BEAM
1 2 3 4 5

Fig. 9

a very large CMS solid angle. In analysis, the energy is determined module by module and the contribution of charged particles (measured by the spectrometer) is subtracted. The calorimeter system is fine grained. This has three advantages: the angular aperture is small, leading to a well defined p_t for a given energy threshold for a module; the probability of a neutral not having a coincident charged particle in the same module (whose subtraction would greatly worsen the energy resolution) is reduced and the probability of two neutrals in the same module is much less.

Most of the system consists of lead or steel plus scintillator sandwiches patterned after those described by Atwood, et al.[15] Boxes with faces 21 cm x 21 cm contain acrylic plastic scintillators 1/2" thick, interleaved with lead or steel plates. The blue light emitted is converted to green in a "wave bar" of 1/8" plastic over the stack which is connected to a light pipe at the rear of the stack. These boxes may be close packed and the light pipes led to photomultipliers near the array.

The array of boxes is shown in plan view in Fig. 8a and looking down the beam in Fig. 8b. The upstream boxes contain 14 radiation lengths of lead (0.5 hadron absorption lengths) and 14 layers of scintillator. The next wall of boxes contains 20" of steel and 20 layers of scintillator. On the average, 75%-85% of hadronic cascade energy is contained in these boxes. Finally, in the 90° region, the existing E-260 calorimeters (with the front lead section removed) are used to capture the remaining 15%-25% of the cascade. The number of vertical strips is

increased from 4 to 5. The rebuilding of the E-260 calorimeters is illustrated in Fig. 9. Near the beam the boxes are reduced to 10.5 x 21 cm^2 for better angular (and thus p_t) resolution.

The p_t resolution is improved over that of E-260 by small blocks (better angular resolution) and improved energy resolution (from 1" sampling). The resolution σ, and its contributing factors are shown in Fig. 10, as a function of laboratory angle. The effect of the variation in polar angle over the E-260 calorimeter vertical strips is very much diluted because they only register the tail of the cascade. Since this variation is partially compensated for by the attenuation of light in the scintillators, the effect on the p_t resolution becomes negligible.

This resolution does not include the p_t kick of the magnet, which will be ~0.25 GeV/c. We run at as low a field as is consistent with adequate momentum resolution.

To accompany the improved p_t resolution, we plan an improved system for calorimeter calibration and stability monitoring. The modules will be checked with low energy beam particles, either by moving the array horizontally and vertically or by deflecting the beam. A ten foot EPB dipole mounted on gimbals would be adequate. The gains will be continuously monitored with a stable light pulser system. This gain checking system will be controlled during inter spill time by a microprocessor.

The outer aperture of the calorimeter system is ±150 milliradians by ±90 milliradians vertically, corresponding to ±130° by ±100° at 400 GeV/c in the center of mass. This large aperture

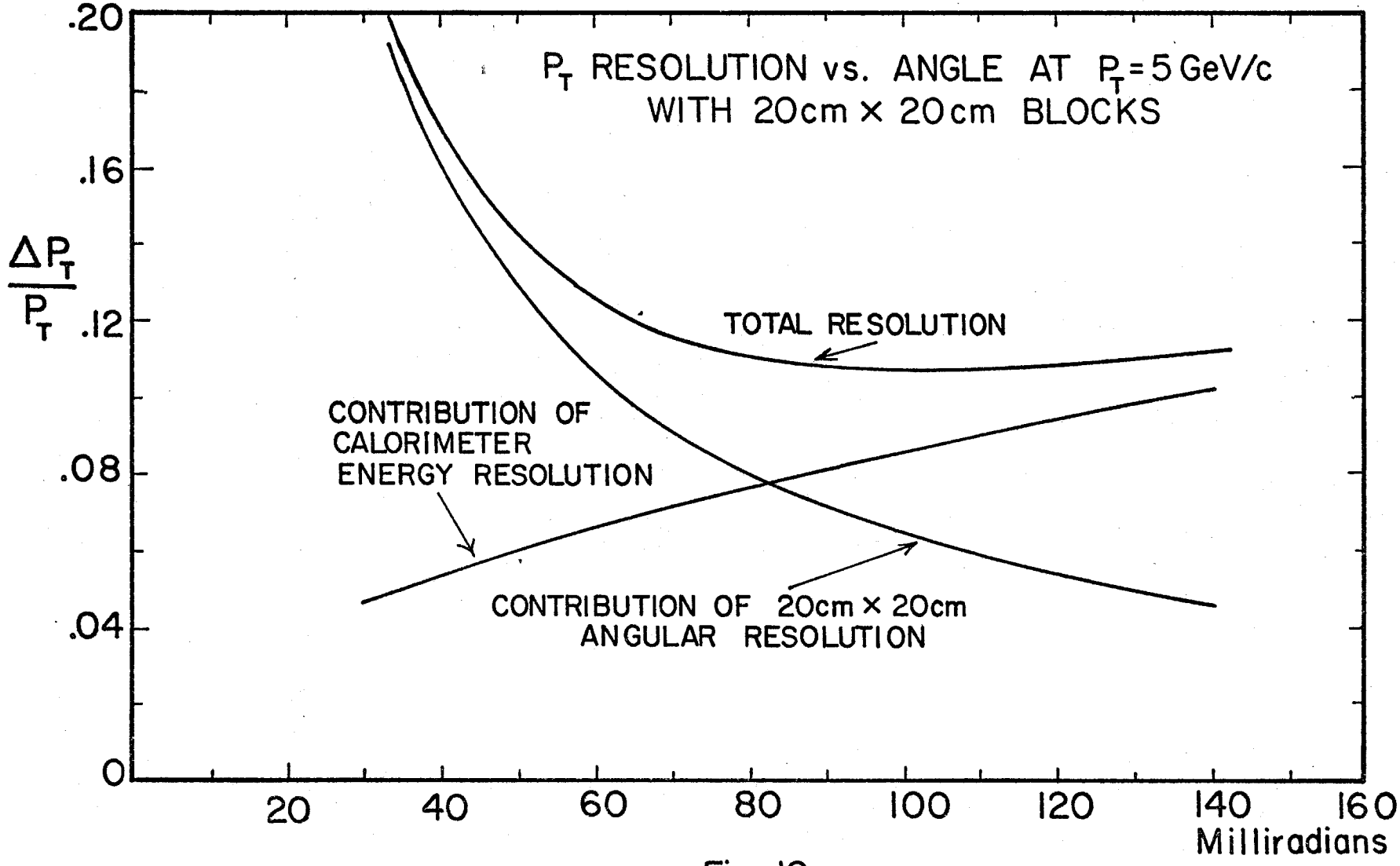
P_T RESOLUTION vs. ANGLE AT P_T=5 GeV/c
WITH 20cm × 20cm BLOCKS
$\frac{\Delta P_T}{P_T}$
.20
.16
.12
.08
.04
0
20
40
60
80
100
120
140
160
Milliradians
TOTAL RESOLUTION
CONTRIBUTION OF
CALORIMETER
ENERGY RESOLUTION
CONTRIBUTION OF 20cm × 20cm
ANGULAR RESOLUTION

Fig. 10

557

is particularly important for the unbiased detection of the "opposite side" jet accompanying a trigger, so that (if this is indeed the correct picture) the dynamics of the constituent scattering may be studied. The calorimeter system is large enough to accept the full angular spread for a moderately high p_t jet in most cases, without the need for an assumption of similarity to jets seen in electron or neutrino interactions. It makes possible the "jet-jet" and "global" triggers discussed in the section on triggering. There is, however, a ±22 mr by ±33 mr hole left open in the middle. Ultimately, the limitations in the forward direction must be found experimentally but the modular construction makes rearrangement easy. Note that not all modules need be used in the trigger; because of angular resolution limits a forward jet trigger might not include the smallest angle modules.

It is proposed (P-523) to add the Cal Tech photon detector to the M.P.S. If that proposal is approved then that detector would be available for this experiment also (contingent on approval of the experimenters of that proposal). This detector is small but has excellent angular resolution and would be ideal to place in the forward direction.

In front of the γ boxes is placed an array of proportional chambers, interleaved with 1-1.5 radiation length lead sheets to give more precise γ ray locations. This system is to be read out by means of cathodes divided into 1" strips, in a manner similar to the Charpak strip chambers[16] or to M.E. Nordberg's

proportional quantameter[17] anode strips. Both cathodes will be read out for x and y. Two gaps (4 cathodes) will be used with lead in between and the strips will be connected together in depth. This will decrease the statistical fluctuations and improve the position resolution with first conversions occurring at varying depths. The amplitudes of the signals on individual strips will be digitized and the centroids calculated in analysis. Considering the strip size and δ ray fluctuations, we estimate σ = 5 mm for the γ locations. Pulse heights and correlations with the back array allow one to remove stereo ambiguities in most cases. The system will be made sensitive enough to detect single minimum ionizing tracks for additional road making for the spark chambers.

The γ position resolution is sufficient to identify what is happening in most cases. The minimum separation of γ rays from a π^0 is equal to the 5 mm resolution at 97 GeV/c; down to this resolution one may separate overlapping gammas by the method of Walker and Bulos.[18] This should be possible even in the presence of many charged particles, which will usually give smaller signals.

Table I summarizes the number of modules, phototubes and ADC channels required:

TABLE I

	Modules	Phototubes	ADC Channels
Gamma blocks	104	104	104
Hadron blocks	128	128	128
Hadron strips (old E-260)	10	20	20
PWC's for γ detector	8	---	384
Total		252	636

C. Triggers

The triggers can be varied, covering a wide range of x as well as a higher range of p_t. The jet triggers can now include some interesting variations made possible by the large aperture; a "jet-jet" trigger requiring a coincidence between two sides will occur at a reasonable rate. It will give an enriched sample of events with both jets fully contained in the calorimeters. This sample will be very useful for studying jet-jet angular correlations since the jet directions will be well defined. Such a trigger will eliminate the trigger bias with respect to quark Fermi motion in the incident hadron and allow a study of that distribution.

Also interesting is a "global" trigger satisfied by total p_t, or perhaps total energy outside a given angle, exceeding a threshold when added over all modules or all but the most forward ones.

The "single particle" trigger will be quite distinct from the jet trigger because the small size of the modules makes triggers by two or more particles in a module rather unlikely. Although the single particle trigger is, in theory, included within the jet trigger data, we propose to continue recording single particle triggers. The virtues of doing so are that it gives a good self-consistency check of the data in terms of theoretical models as well as allowing a convenient way to compare data with experiments that do not have a jet trigger (e.g., ISR-Split Field Magnet.

In addition to the above we will run the same triggers simultaneously at different biases (lower ones prescaled) and also record interacting beam events for a small percentage of the total live time.

D. Cerenkov Counters

Charged particle identification will be accomplished by means of two gas Cerenkov Counters (C_A and C_B) (see Fig. 7b). C_B is the existing 22 cell counter with its extension removed giving an overall radiator length of 2.3 m. The mirrors will be rearranged so that there will be six cells covering each 90° section of the calorimeter. C_A, shown in Fig. 11, is a new counter occupying the magnet volume. It will be 2.1 m in length and have 24 cells. Both counters will be capable of operating at an effective index of $(n-1) = 10^{-4}$ at the three or four photoelectron level. Table II lists the parameters for these counters. The estimated number of photoelectrons shown in the table assumes a mean total photon to photoelectron collection and

557

conversion efficiency of 10% over the range of 2200 to 5500 A^{o}. This is achieveable using wavelength shifters and bi-alkali photocathode photomultiplier tubes. Table III shows the kinematic region over which particle identification is possible.

TABLE II

CERENKOV COUNTER PARAMETERS

	C_A	C_B
Radiator	Ne-Air	CO_2
index: $(n-1) \times 10^4$	1.0	4.1
length (m)	2.1	2.3
quanta/m (2200-5500 A^{o})	26	103
Photoelectrons	5	24
No. cells	24	22
Threshold (GeV/c) π	9.8	4.8
Threshold (GeV/c) K	35	17.1
Threshold (GeV/c) P	66	32.3
Radiation lengths	.05%	.05%

$\check{C}_A$ MAGNET CEKENKOV COUNTER

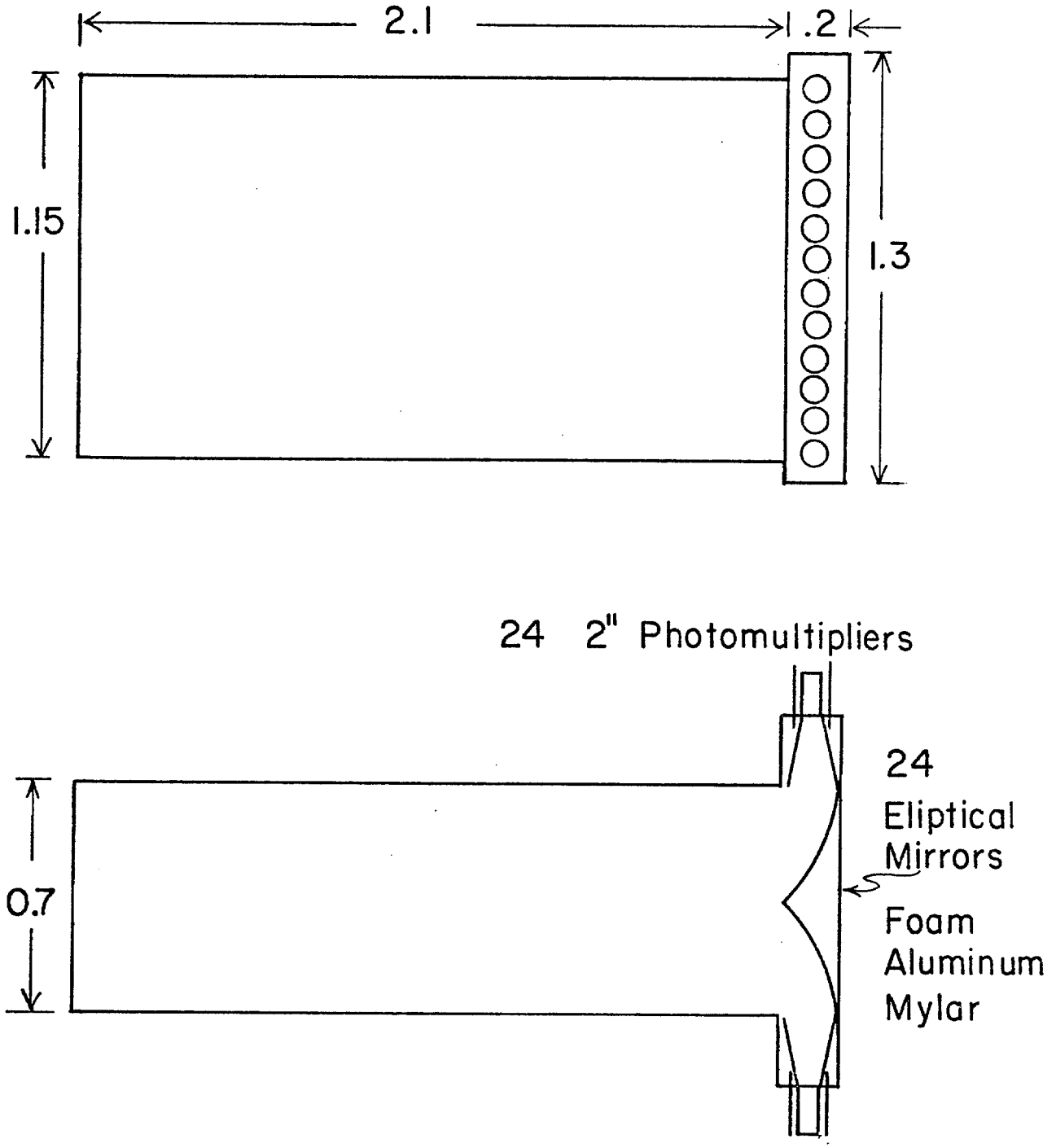

Fig. 11

TABLE III

PARTICLE IDENTIFICATION

	p (GeV/c)	p_t (100 mr)	p_t (70 mr)
π identification	4.8-35.0	0.5-3.5	0.35-2.45
K "	17.1-32.3	1.7-3.2	1.2 -2.30
P "	17.1-66.0	1.7-6.6	1.2-4.6
Separation	GeV/c		
π/KP	5-32.3		
πK/P	17-66		

E. M6W Beam Improvements - 400 GeV Energy Upgrade

The present version of the beam line consists of four stages, with focussing in both horizontal and vertical planes at the end of each stage. A dispersion of 9.5 cm/% is produced by the first stage, and recombination is accomplished by both the second and third stages.

The higher energy requires greater bending power in all stages. The present bends are shown in Table IV.

TABLE IV

Distance from meson target (feet)	Angle (mrad)	B Kg at 200 GeV/c	L (feet)	
92	8.6	9.2	2 x 10	Septum
* 200	51.2	18.6	3 x 20	First stage
803	17.1	18.6	1 x 20	Second stage
*1190	-51.2	18.6	3 x 20	Third stage
1290	- 3.0	1.6	2 x 20	and switching
1479	34.1	18.8	2 x 20	between branches.

The beam can be upgraded by replacing the two strings of three Main Ring magnets (*) in the first and third stages by two strings of three Energy-Doubler/Saver magnets. The single conventional bending magnet in the second stage (803 feet) is replaced by two conventional magnets, and the pair at 1479 feet is replaced by four conventional magnets.

An increase in the number of septum magnets is required. Space considerations limit the total number of septa to three. The additional increase in bending power is gained by a small increase in the field of the bending magnets in the first stage. The beam can then be placed on its previous path by moving the midpoint of this set of three bending magnets about five feet upstream. Thus the field of the superconducting bending magnets in the first stage is 36.76 kilogauss, while the field of those in the third stage is 35.28 kilogauss.

The quadrupoles in the first and second stages each form a doublet focusing point to point. In the first stage, a pair of quadrupoles focuses the beam horizontally. It is followed by the bending magnets, and then another pair of quadrupoles defocusing horizontally. In the second stage the sequence of magnets is reversed. The energy upgrade of M6 requires no new quadrupoles in either of the first two stages.

It is desirable to retain the 200 GeV optics of the third stage for operation of the DISC Cerenkov counter. This will be used to separate π's and protons up to 400 GeV. Additional quadrupole requirements consists of two 4Q120's and two 3Q120's in the third stage.

Finally the fourth stage is used to bring the beam to a focus at the multiparticle spectrometer. There are four quadrupoles and no bending magnets in this fourth stage. The quadrupoles form a doublet focusing point to point. The first two are horizontally defocusing while the second two are horizontally focusing. At 400 GeV the highest gradient in any physical quadrupole is 5.2 kilogauss/inch.

We realize that the M6 West upgrade to 400 GeV is a complicated and costly endeavor. A first look at the solution to the cryogenic problem is one CTI 1400 liquifier would be needed for each of the two bending strings. The plans are to house the refrigeraters in small Portakamps or enclosures to the west of the meson berm. This minimizes the transfer lines needed. At 400 GeV only 37 Kg is need and "reject" doubler magnets, adequate for beam line use, will be available.

The upgrade could be completed in 1 to 1-1/2 years. We believe the physics we propose as well as other experiments in the M6 line justify this effort. The proposers of this experiment are ready and enthusiastic to participate in the work of upgrading the beam.

A future possibility for this beam line is to put in "good" doubler magnets rather than "rejects", and also consider some additional bending elements. Then the M6 line could reach 500-600 GeV and extend even further the range of hadron jet physics in the M.P.S.

Increased Flux

An important improvement in the M6 beam is a variable targeting angle. In the near future this can be reduced to 1 mrad from the present 3 mrad giving higher flux. At 300 GeV where we propose to do a lot of our running the fluxes are shown in Table V.

TABLE V

	Yield per 10^{12} on target at 300 GeV
π^+	2×10^6
K^+	10^5
p^+	10^8
π^-	3×10^5
K^-	10^4
$\bar{p}$	10^3

Transition Radiation Detector

The existing 4 beam Cerenkov counters allow reliable $\pi/K/p$ separation up to 200 GeV. Above that energy the two threshold counters give too little light. The CERN DISC counter cannot be used to identify K's but instead will separate πK from p. We propose to add to the beam tagging system a two module transition radiation detector. Together with the DISC these will allow good beam identification for $\pi^{\pm}$, $K^{\pm}$, and p above 300 GeV. The detector is based on a design of Prof. G. B. Yodh, (University of Maryland) who has provided us with characteristics of the detector. Each of the modules uses a 1000 foil (each 10^{-3} inches thick) Be radiator and a 10 cm Xenon proportional counter (with a discriminator set to count only x-rays below 10 KeV). The detector will then respond preferentially to transition radiation from K's. The detection probabilities in Table VI are predicted.

TABLE VI

Beam Energy	One module response probability		Two modules	
Beam Energy	π	K	K called π	π called K
300 GeV	.026	0.86	.002	.0006
400 GeV	.0038	0.82	.003	.00004

Combining the figures in Tables V and VI we see that of those particles called K^-'s at 300 GeV, only 0.2% will really be π^-'s. A tentative location for the detectors will be in the B12-13 bending string (1480 feet).

V. LOGISTICS

Rates

With the geometry described in Section IV we can estimate the rates as follows:

$$\frac{dN}{dp_t^{\,2}} = E\,\frac{d^3\sigma}{dp^3}\;\pi\;\Delta\phi\;\Delta y\;t, \qquad (1)$$

where $\Delta\phi$ is the azimuthal acceptance including a factor of two for both sides and Δy is the rapidity acceptance. t is the target thickness multiplied by the flux expressed in events/nanobarn/spill.

The fiducial area for the jet vector used in these calculations is 65 cm vertically by 47 cm wide in E-260 (about 2 modules out of 4). In this proposal we use 3 modules out of 5 and the variable vertical height shown in Fig. 6. A flat x dependence is assumed. This gives the numbers shown in Table VII.

TABLE VII

	E-260	This Proposal
Target length (in. of H_2)	12"	18"
Beam flux (per spill)	4×10^6	6×10^6
t, events per nanobarn/spill	.0050	.0113
$\Delta\phi\Delta y$	.072	.27 (200 GeV)
		.30 (300 GeV)
		.38 (400 GeV)

557

In order to estimate numbers of events several assumptions have to be made.

We start with a measured jet cross section from E-260[7]

$$E \frac{d^3\sigma}{dp^3} = 28 \text{ nb/GeV}^2 \text{ per nucleon} \tag{2}$$

for p_t = 5 GeV/c and 200 GeV incident. This is measured on Be so a factor of two for the A-dependence reduces this to 14 nb/GeV^2.

A good fit to single particle data[8] is given by

$$E \frac{d^3\sigma}{dp^3} \propto p_t^{-8} (1 - x_t)^9 \tag{3}$$

Combining this x_t dependence with the acceptance and interaction rates given above leads to the figures in Table VIII.

TABLE VIII

		Events/GeV^2/spill, p_t = 5 GeV/c
E-260	200 GeV	.016
This proposal	200 GeV	.13
	300 GeV	.83
	400 GeV	2.21

The jet cross section falls roughly as $e^{-2.6\, p_t}$. Table IX gives the number of events expected in 800 hours of running assuming 50% operating efficiency and one spill every 15 seconds.

TABLE IX

NUMBER OF EVENTS IN AN 800 HR RUN

p_t >	E-260	This Proposal		
		200 GeV	300 GeV	400 GeV
5 GeV/c	2200	18,000	120,000	310,000
6	160	1,300	8,000	23,000
7	12	100	600	1,600
8			50	110

Run Plan

Simultaneous jet and single particle high p_t triggers would be run. We might also add an interacting beam trigger (for $\lesssim$ 10% of the live time), simultaneous running at different p_t thresholds with the lower bias prescaled (for both jet and single particle high p_t), a "double jet" trigger at lower bias than the single jet, and the "global" trigger mentioned earlier.

There is some evidence[6] that the high multiplicity events seen in the 30" bare bubble chamber runs show jet structure (coplanarity) although at much lower p_t. It would be interesting to add an additional trigger (running simultaneously and prescaled) for high multiplicity events (using PWC's in the trigger with no p_t selection).

The run is divided into positive and negative runs, and runs at different momenta. A tentative division of time is shown in Table X.

TABLE X

	Beam Energy	Polarity	Hours requested	Number of jet events above p_t = 5 GeV/c
Present M6 Beam	200 GeV	+	200	4800
		-	200	4800
Upgraded M6 Beam	300	+	400	64000
		-	400	64000
	400	+	400	165000
			1600	

During the 300 GeV π^- run it would be necessary to target 2×10^{13} protons on the meson area target. At 400 GeV diffracted protons would be used.

This experiment and beam line are not limited to 400 GeV. With 1000 GeV protons from the Energy Doubler/Saver available, adequate π^- flux would be obtained to extend the proton/pion comparison up to 500 GeV.

Other targets

As in E-260 we can obtain the A-dependence of the jet cross section using the aluminum end window of the hydrogen target. We will design the new target with this in mind; other elements could also be used.

Although we propose to take the bulk of our data with hydrogen, we have the option of running with thick, solid targets. This may be necessary to measure the π^- cross sections to the highest energy possible where the π^- flux will be limited.

For comparison with quark models it is also of interest to run with deuterium.

Drift Chambers and Rate Considerations

We are proposing to run this experiment at 3×10^5 interactions (pretriggers) per spill or about twice that of E-260. For a total delay in the trigger system of 1 μsec this gives a probability of ~8% (or twice that in E-260) of having a second interaction within the memory time of the spark chambers. These accidental interactions do not seem to cause a great deal of difficulty. They are in general of lower multiplicity than the high p_t event causing the trigger, and the time resolution of the PWC's used (and required) for road making eliminates these spurious tracks. However, a further improvement will be made in this experiment by adding additional PWC's with 2 mm wire spacing in the central region where most of the confusion can occur.

A major change in the track finding system would occur if the spark chambers were replaced by a combination PWC drift chamber system. The interaction rate could be 5 to 10 X higher. (depends on the cell size chosen). Assuming that the p_t dependence continues as has been observed in E-260 at lower p_t, this would extend the maximum p_t attainable (at a given statistical

accuracy) by 0.5-1.0 GeV/c. We believe that the proposed physics can be done with the existing spark chamber - PWC system. On the other hand we would support and help with replacement of the spark chambers as part of a general MPS improvement program. This question requires more discussion between us, the proposers of other experiments using the MPS, and the Laboratory on the long-range schedule for the MPS and the meson area.

Timetable

Since most of the apparatus already exists and works well the costs for new equipment are modest. Since our basic setup, and especially the associated off-line software, work well, we will use the Fermilab operating support efficiently. The new equipment needed divides into four major categories: (1) hadron calorimeter improvements and neutral detector, (2) additional PWC's, (3) magnet Cerenkov counter and modifications to C_B; and (4) transition radiation detector. The cost of these items is within the capabilities of the proposing institutions.

We propose a schedule assuming approval in June, 1977. This proposal splits the running into pre and post upgrade blocs. It is important to do the 200 GeV runs (with > 2 x the statistics of E-260 and larger acceptance) as early as possible to resolve the present controversy over the p_t dependence of the jet cross section. The total request of 1600 hours is large but we do not feel it is excessive for an experiment of this importance and, as proposed, the running time is spread over almost a year.

Milestones	Apparatus	Runs
1977 June-Approval		
July	Prototypes, design 3 months	
Aug		
Sept		
Oct - Prototypes, design complete		
Nov	Construction 7 months	
Dec		
1978 Jan		
Feb		
Mar		
Apr		
May -Experiment ready to run		Checkout 2-4 weeks; 200 GeV data - 400 hrs.
June		
July	M6 installation	
Aug		
Sept		
Oct -M6 upgrade complete		300-400 GeV data - 600 hrs.
Nov		
Dec		
1979 Jan		
Feb		300-400 GeV data - 600 hrs.
Mar		

Collaboration Arrangements

The details of the physicist participation and equipment contribution from the J.I.N.R. will take several months to finalize. Tentatively there will be 4 or 5 physicists participating. The Dubna physicists here are enthusiastic about having their Institute join in this endeavor. In our discussions while writing this proposal we have identified several areas where specific Dubna physicists would make a significant contribution, as well as certain substantial portions of the apparatus that they could provide.

557

Cost

A preliminary estimate of the cost of the new equipment added to the M.P.S. to do this experiment (exclusive of the M6 energy upgrade) is $200-250,000. Of the total, perhaps 1/3 could be identified as a Fermilab Meson Area contribution: PREP equipment, some mechanical supports, etc. The remainder would be divided among the proposing institutions, and since it is spread over a two-year period it is probably within our available resources.

REFERENCES

[1]R. D. Field and R. P. Feynman, Caltech preprint CALT-68-565.

[2]D. Sivers, S. Brodsky, and R. Blankenbecler, Physics Reports 23C, No. 1 (1976) 1-121. North Holland Publishing Co. Experimental and Theoretical review.

[3]See, e.g., review of L. Mo in APS DPF Meeting at BNL, October, 1976 (Proceedings BNL 50598); Deden, et al., Nuclear Physics B85 269 (1975).

[4]G. Hanson, et al., PRL 35, 1609 (1975).

[5]J. W. Cronin, et al., Phys. Rev. D11, 3105 (1975), D. Antreasyan, et al., PRL 38, 112 (1977), and private communication of new results with a Be target.

[6]P. Darriulat, et al., Nuclear Physics B107, 429 (1976).

[7]"Observation of the Production of Jets of Particles at High Transverse Momentum and Comparison with Inclusive Single Particle Reactions":, by C. Bromberg, et al., Caltech Preprint CALT-68-590, March, 1977.

[8]CERN/TH Report ISR Discussion Meetings by M. Jacob (ed.): No. 17 Nov., 1975, "Correlations Among Large p_t Particles", and No. 21, March, 1977, "Large Transverse Momentum Phenomena (The Study of Jet Structure)".

[9]"Calorimeter-Triggered High-p_t Physics at the Fermilab Multi-particle Spectrometer", by V. Ashford, invited paper at Chicago APS Meeting, Feb., 1977. Bull. Am. Phys. Soc. 22, 59 (1977).

[10]G. Donaldson, et al., PRL 36, 1110 (1976).

[11]L. Kluberg, et al., PRL 38, 670 (1977).

[12]A. M. Baldin, Proc. of the 1975 CERN-JINR School of Physics, Alushta, JINR E2-9086, Dubna (1975).

[13]G. Berlad, A. Dar, and G. Eilam, Phys. Rev. D13, 161 (1976).

[14]J. D. Bjorken, Phys. Rev. D8, 4098 (1973); also S. Berman, J. Bjorken, and J. Kogut, Phys. Rev. D4, 3388 (1971).

[15]W. B. Atwood, B. C. Barish, C. Y. Prescott, L. S. Rochester SLAC TN-76-7.

[16]A. Breskin, G. Charpak, C. De Mierre, S. Majeswki, E. Policarpo, F. Sauli and J. C. Santiard, submitted to Nuclear Instruments and Methods.

[17]M. Emory Nordberg, Cornell University preprint, CLNS 138 Jan. 1971.

[18]R. Walker CALT-68-330; F. Bulos PEP-194.