FERMILAB-Proposal-0509

RECEIVED
SEP 13 1976
DIRECTORS OFFICE
FERMILAB

Search for the large angle scattering of muon

T. Shirai* and N. Tateyama

Faculty of technology, Kanagawa University, Yokohama

H. Sugimoto

Cosmic Ray Laboratory, University of Tokyo, Tokyo

S. Dake

Faculty of Science, Kobe University, Kobe

Abstract

We propose a experiment to expose the emulsion chamber to the FNAL 200 GeV/c muon beam. The object of the experiment is to investigate the electromagnetic interaction of muon to search for the large angle scattering of muon and for the muon-incluced large angle Bremsstrahlung gamma rays.

* Scientific Spokesman

Kanagawa University, Institute of Physics

Rokkakubashi, Yokohama, 221, Japan

3 pgs.

The purpose of the experiment

For these several years, we have observed the electro-magnetic interactions induced by cosmic-ray muon by the use of the emulsion chamber exposed at the underground laboratory[1]. Among these, there are several showers which may be indicative of anomalous electro-magnetic interactions of muon.

So, we propose a experiment to expose the emulsion chamber to the FNAL 200 GeV/c muon beam. The primary object of our experiment is to investigate the electro-magnetic interaction, and the secondary is to investigate the nuclear interaction of muon. The momenta of the charged particles are measured by multiple coulomb scattering in lead plates. The energy of gamma rays are measured by observation of cascade shower in lead plates.

The main objective of this experiments are

1) to search for the large angle scattering of muon,
2) to search for the muon-induced large angle Bremsstrahlung gamma rays,
3) to investigate the multiple particle production by muon.

Conditions required in this experiment

1) Beam; parallel and mono-energetic muon beam
2) Energy; muon beam about 200 GeV/c
3) Amounts of irradiation; about 10^4 and 10^6 particles/cm^2 on the detector
4) Shield materials; lead blocks enough to shield the detector

Duration of the Testing and Data-Taking

About two hours in our rough estimation

Detector

The detector consists of two parts; upper and lower chamber. The upper chamber is constituted of nuclear emulsion plates which are piled up in the form of a stack. The lower chamber is constituted of nuclear emulsion plates and lead plates which are piled up alternatively. The schematic view of the detector is shown in the figure. The geometrical size of the detector is about 10 x 10 x 12 (cm) and the total thickness of lead absorber is about 20 radiation length. Two chambers are scheduled to be exposed.

Reference

1) M. Akashi et al. Conference Papers, 14th Int. Conf. Cosmic Rays, München, 6, 2037, (1975)
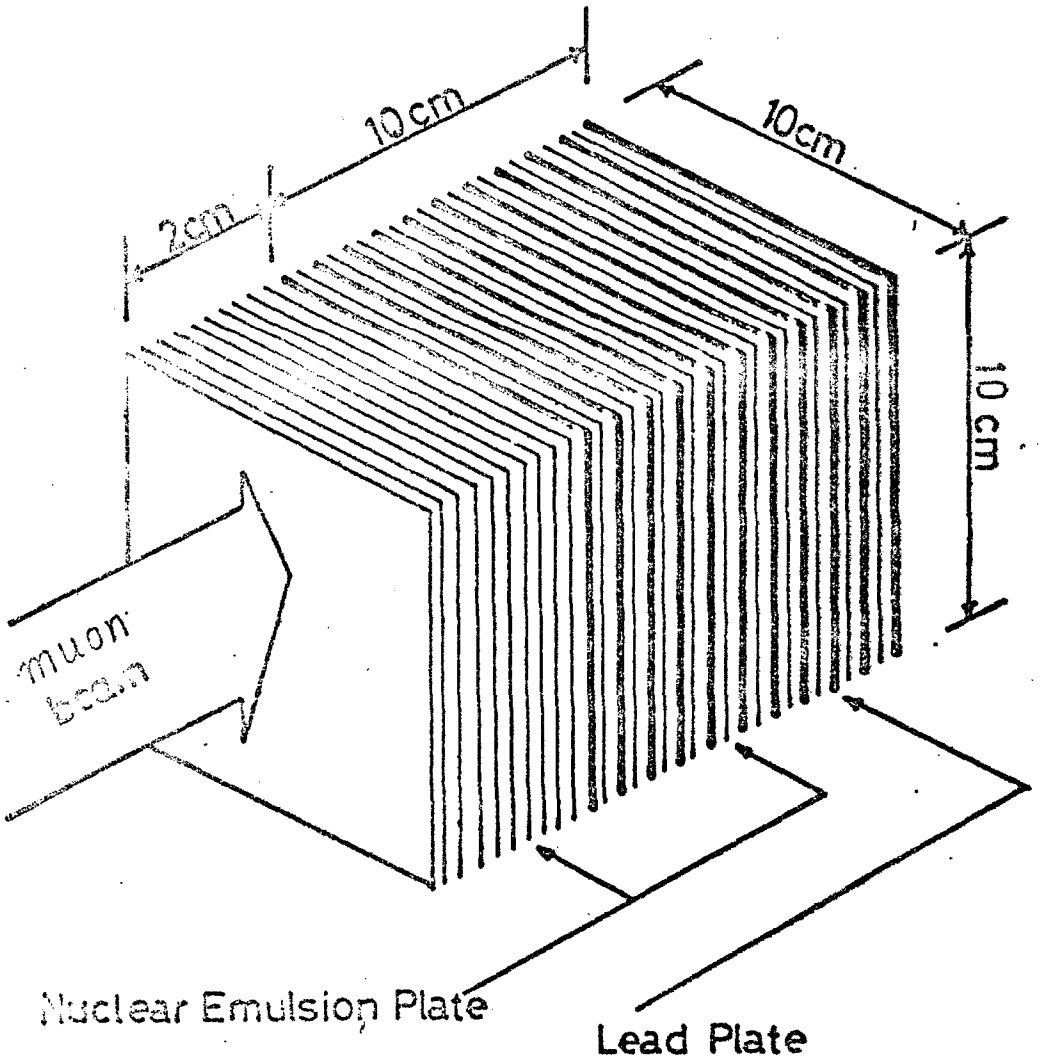
SCHEMATIC VIEW OF THE DETECTOR