Fermilab

June 5, 1991

TO: Distribution

FROM: R. Noble

SUBJECT: Transition Section and Debuncher Review Meetings

AGENDA: Wednesday, July 17

1. Overview and schedule - J. MacLachlan
2. RF Systems
   a) RF modulator - H. Pfeffer
   b) Klystron - A. Moretti
   c) Phase and amplitude control - R. Pasquinelli

Thursday, July 18

1. Transition and Debuncher cavities - H.W. Miller, M. May
2. Vacuum and girder - G. Lee
3. Cavity and Rf system cooling - J. Satti, J. Crisp
4. Diagnostics and controls - E. McCrory

DATES: July 17 - 18, 1991

TIME: 9:00 - 10:30 am

PLACE: Penthouse

NOTE: Agenda subject to change based on suggestions of participants.

RN:dd

Distribution:

J. Crisp	H.W. Miller
Q. Kerns	A. Moretti
G. Lee	R. Pasquinelli
J. MacLachlan	H. Pfeffer
M. May	J. Satti
E. McCrory	

cc: D. Bogert
M. Harrison
J. Lockwood
P. Prieto
C. Schmidt

LINAC UPGRADE PROJECT MASTER SCHEDULE

7/12/91

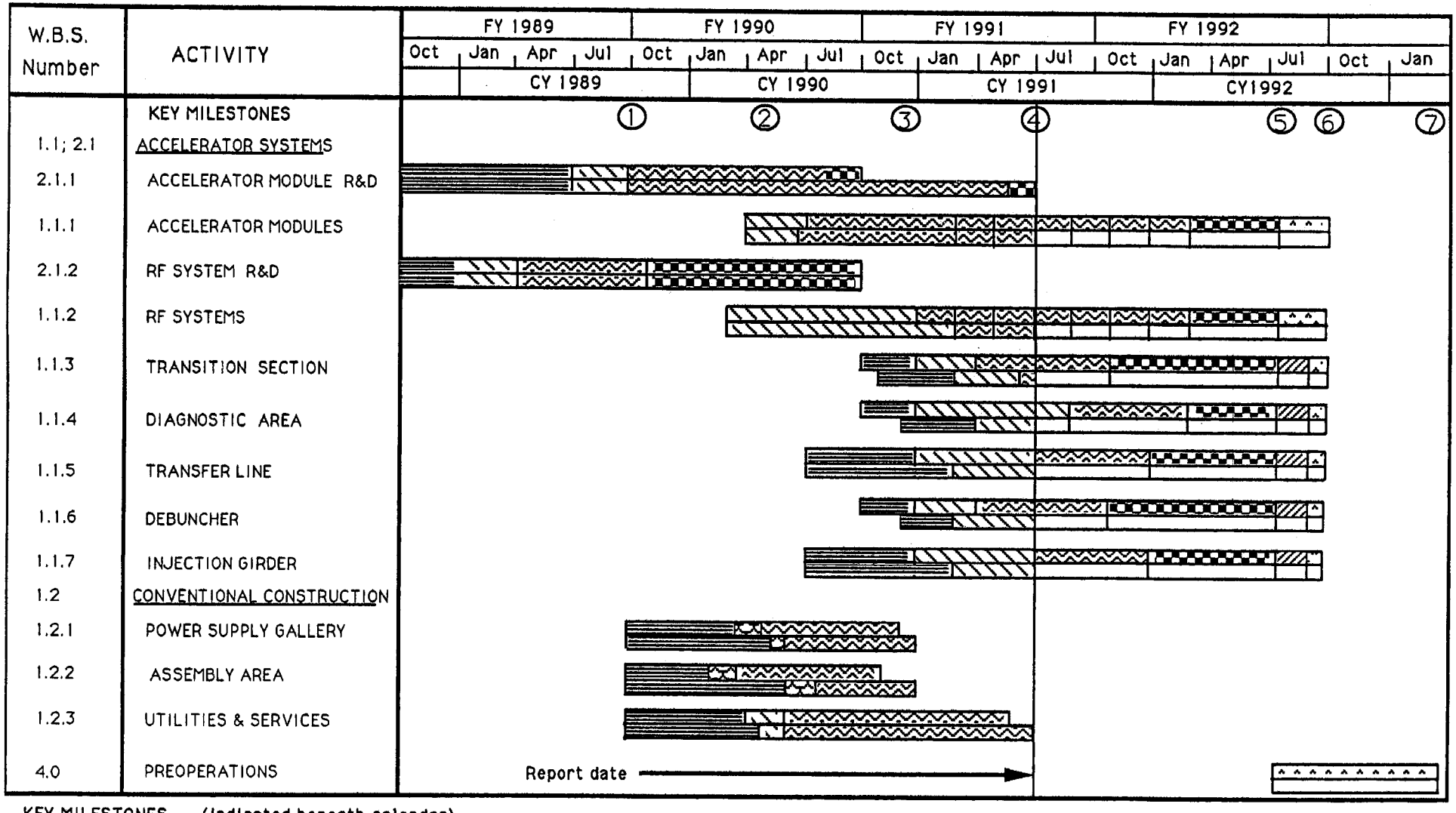

KEY MILESTONES (indicated beneath calendar)

1.	Start of Project	Oct. 1, 1989
2.	Start Construction of Power Supply Gallery	May 1, 1990
3.	Complete Construction of Power Supply Gallery	Dec. 15, 1990
4.	Complete Power Test of First Production Accel. Module	Jul. 1, 1991
5.	Start Conversion to 400 MeV	Jul. 15, 1992
6.	Complete Conversion and Start Commissioning	Sep. 30, 1992
7.	Completion of Project	Mar. 31, 1993

Baseline
Actual

Design
Procure
Fabricate
Test
Install
Commission
Bid

J. MacLachlan

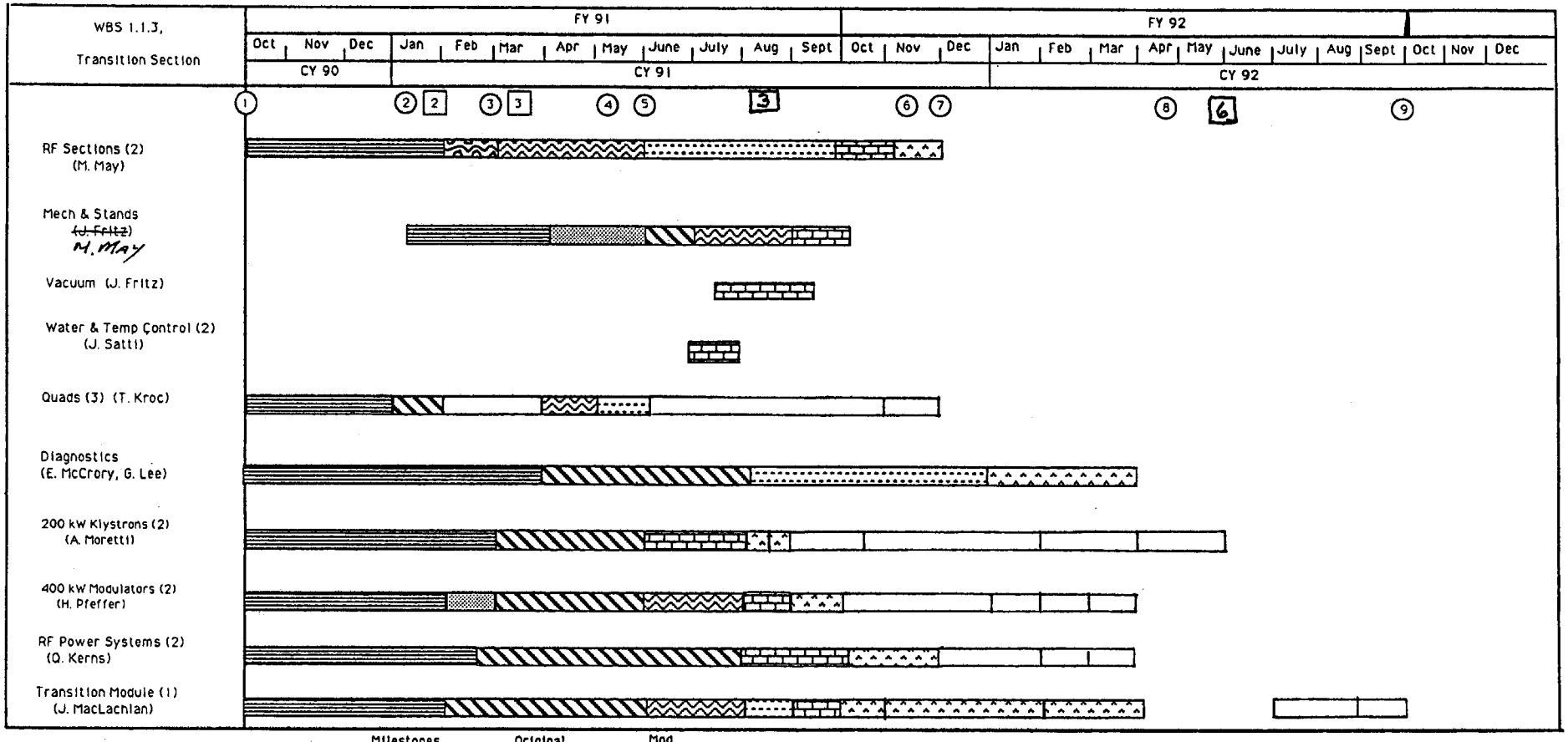

Milestones	Original	Mod.
1. Complete review of conceptual design	10/01/90	01/21/91
2. 200 kW Klystron test at Varian	01/07/91	~~03/15/91~~ 1/23/91
3. 200 kW Klystron test at Fermilab	03/01/91	~~5/15/91~~ 8/15/91
4. Transition section copper from Hitachi	05/17/91	
5. Debuncher copper from Hitachi	05/31/91	
6. Tests of klystrons 1,2,3 completed	11/21/91	6/1/91
7. End fabrication tr. rec. and debuncher	11/31/91	
8. Begin tr. sec. tests	04/01/92	
9. Begin commissioning	10/01/92	

Design
Procure
Fabricate
Test
Install
Integrate
Bid

17 July 91
~~14 Jan 91~~
J. MacLachlan

JM:dd

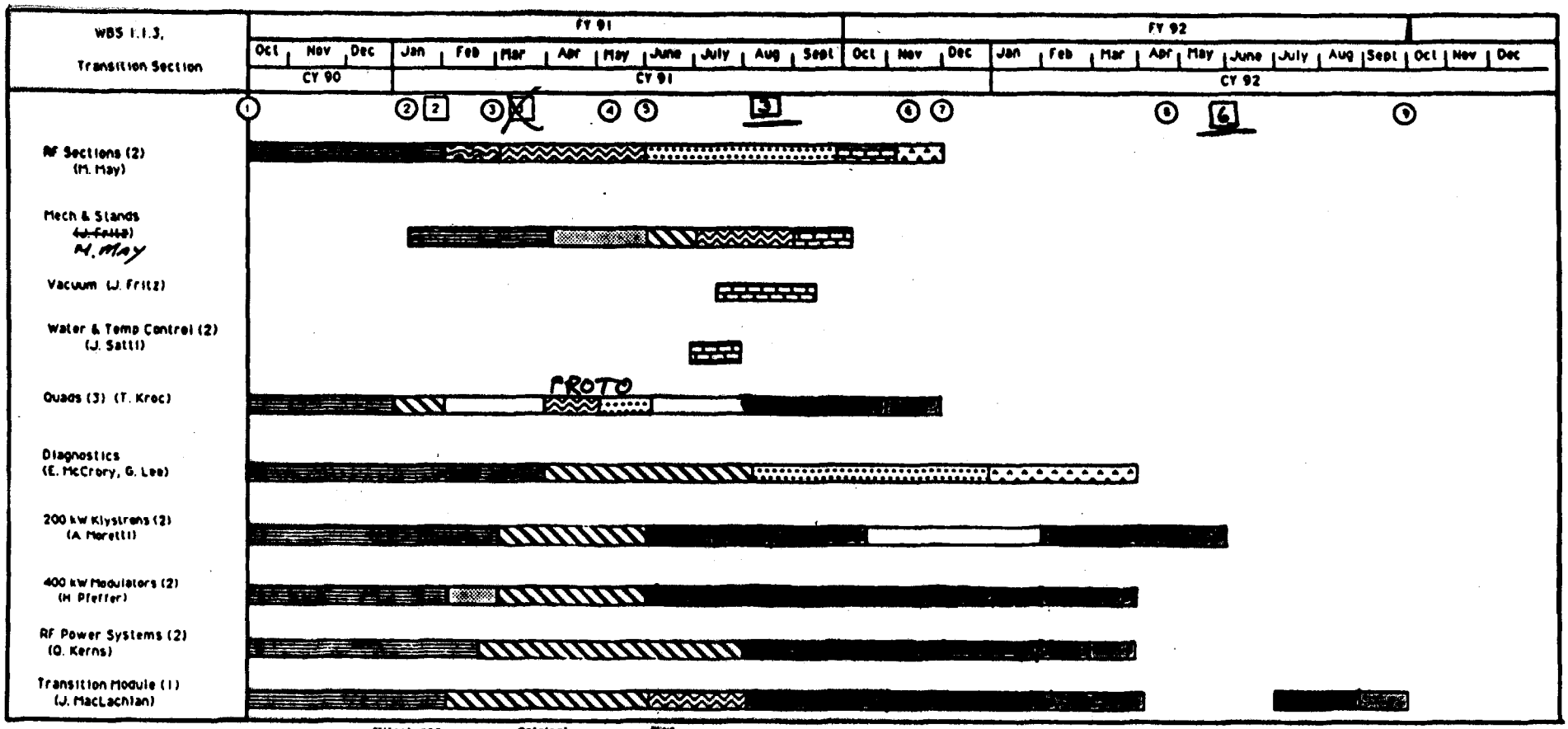

Milestones	Original	Mod.
1. Complete review of conceptual design	10/01/90	01/21/91
2. 200 kW Klystron test at Varian	01/07/91	~~[illegible]~~ 1/22/91
3. 200 kW Klystron test at Fermilab	03/01/91	~~[illegible]~~ 8/15/91
4. Transition section copper from Hitachi	05/17/91	
5. Debuncher copper from Hitachi	05/31/91	
6. Tests of klystrons 1,2,3 completed	11/21/91	6/1/91
7. End fabrication tr. rec. and debuncher	11/31/91	
8. Begin tr. sec. tests	04/01/92	
9. Begin commissioning	10/01/92	

12 July 91

J. MacLachlan

JM:dd

H. Pfeffer

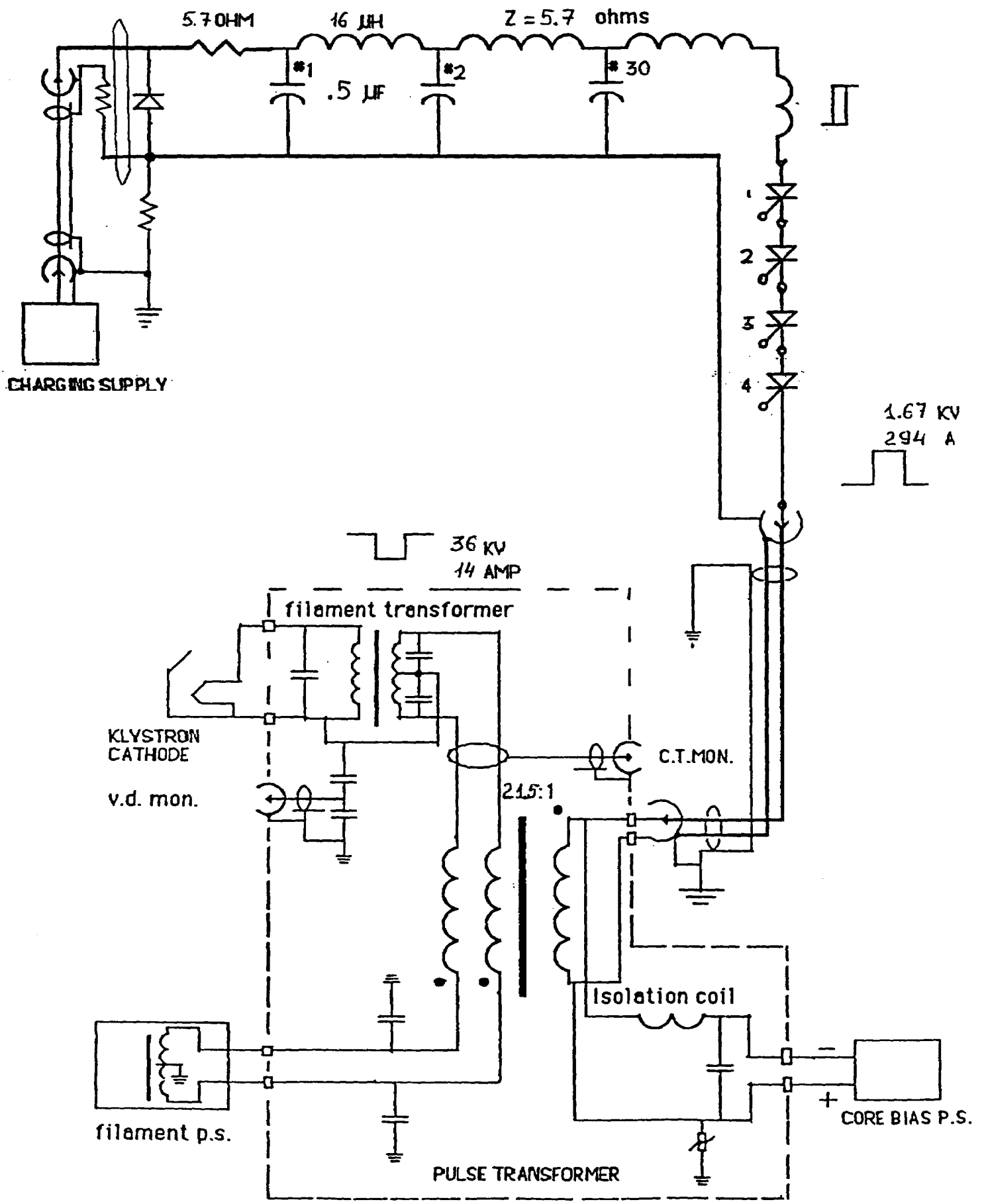
5.7 OHM
16 µH
Z = 5.7 ohms
#1
.5 µF
#2
30
1
2
3
4
CHARGING SUPPLY
1.67 KV
294 A
36 KV
14 AMP
filament transformer
KLYSTRON
CATHODE
v.d. mon.
C.T.MON.
21.5:1
Isolation coil
filament p.s.
CORE BIAS P.S.
PULSE TRANSFORMER

500 kW Modulator equipment

1. Contactor 120 VAC, 3 kW	$ 200
2. Power Supply 4 kVDC, 2kJ/Sec	$ 5,000
3. Pulse Transformer 36 kV, 500kW	$10,000
4. Capacitors 0.5 uF, ...kV, 30 units	$ 1,000
5. Coils 16 uH, 30 units	$ 1,000
6. SCRs 1.6 kV, 500 Amps, 6 units	$ 100
7. Diods 1.6 kV, ... Amps, 8 units	$ 400
8. Bias Supply ...V, 4 Amps	$ 200
9. Low Voltage Supply (+5 V, +/-15 V, e.t.c.)	$ 1,000
10.PFN mechanical assembly	$ 2,000
11.Voltage Dividers 4 kV, 2 units	$ 1,000
12.Voltage Divider 8 kV	$ 800
13.Current Transformers, 2 units	$ 1,000
14.Shorting Relays, 4 kV, 600 Amps, 3 units	$ 600
15.Switch Triggering Generator	$ 100
16.Saturating Choke	$ 50
17.Different Low-voltage Items	$ 5,000
18.GND & Resistor Sticks, 2 units	$ 400
19.Cables	$ 1,000
20.E.t.c	$ 5,000
TOTAL	$35,850

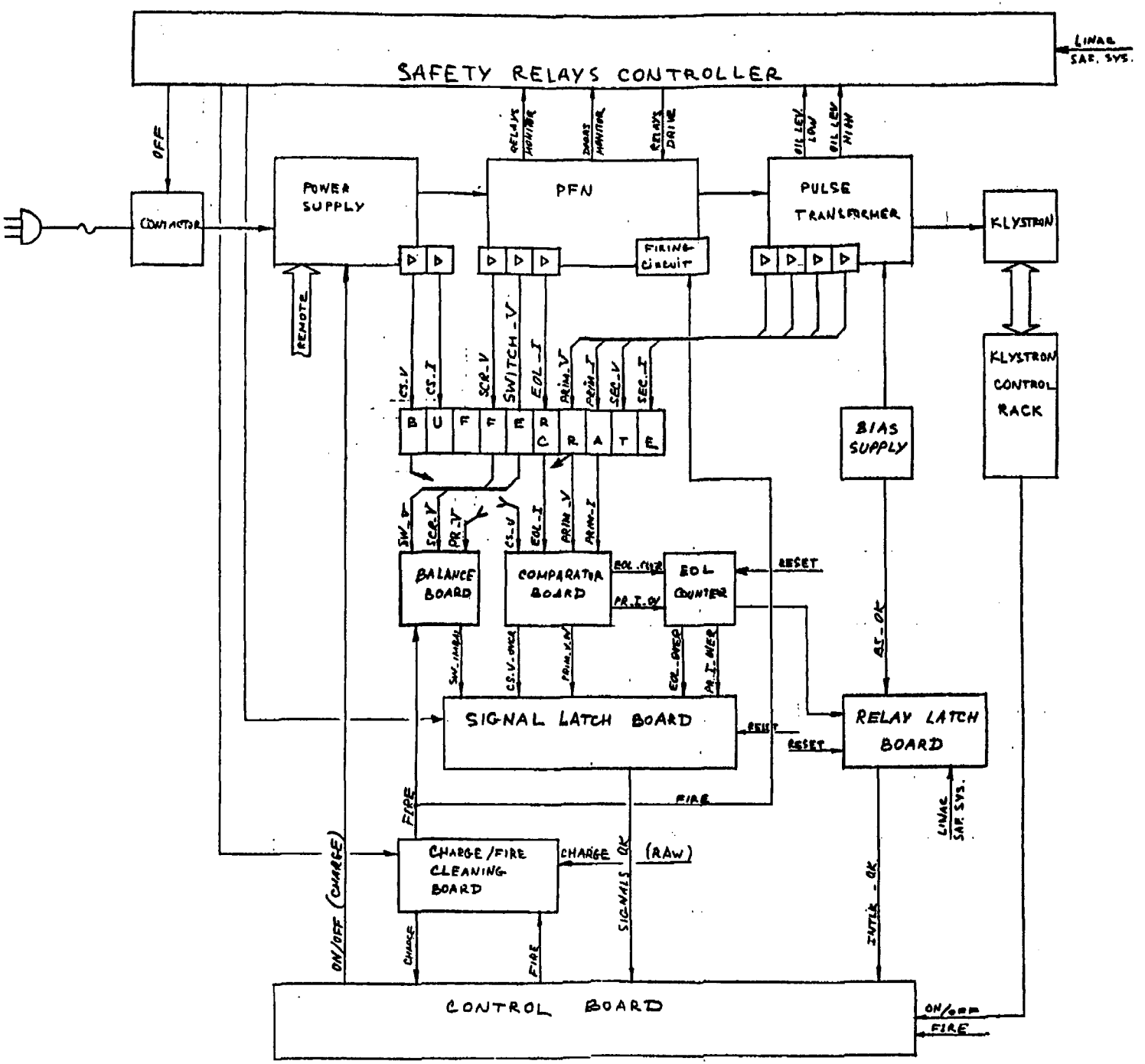
SAFETY RELAYS CONTROLLER
LINAC SAF. SYS.
OFF
CONTACTOR
POWER SUPPLY
REMOTE
PFN
FIRING CIRCUIT
PULSE TRANSFORMER
KLYSTRON
KLYSTRON CONTROL RACK
BIAS SUPPLY
BALANCE BOARD
COMPARATOR BOARD
EOL COUNTER
RESET
SIGNAL LATCH BOARD
RELAY LATCH BOARD
FIRE
CHARGE/FIRE CLEANING BOARD
CHARGE OK
(RAW)
ON/OFF (CHARGE)
SIGNALS OK
INTLK - OK
LINAC SAF. SYS.
CONTROL BOARD
ON/OFF
FIRE

T.V. Klystron Schedule

1. Tubes ...	(1) one on Hand		
	(4) due starting		Jan 1, 1992 + one every Month.
			⋮
			April, 1992
2. Ceramic Windows	(3)	[Need (3)]	Dec 1, 1991
	(3)	(2 on hand Now)	Jan 1, 1992
	(3)		Feb 1, 1992
	(2)		April, 1992
3. 1½ inch directional Couplers.	(3)	[Need (3)]	Dec 1, 1991
	(3)		Jan 1, 1992
	(6)		Feb 1, 1992
* 4. 3⅛" Dir. Couplers	(6) Required	(2 on hand)	Needs to be requisitioned 4 months Delivery
* 5. 3⅛ Coaxial to Waveguide transitions	(2)	on hand	Need to be requisitioned with 4 month Delivery.
	(3)		
6. Focusing Electromagnet	(1)	on hand	
	(3)		due Oct 1, 1991
* 7. Straight Coaxial 3⅛ pieces and bends	~180 feet Straight required		Need to check quantity on hand.
	~12 Bends required		, believed 70% on hand.

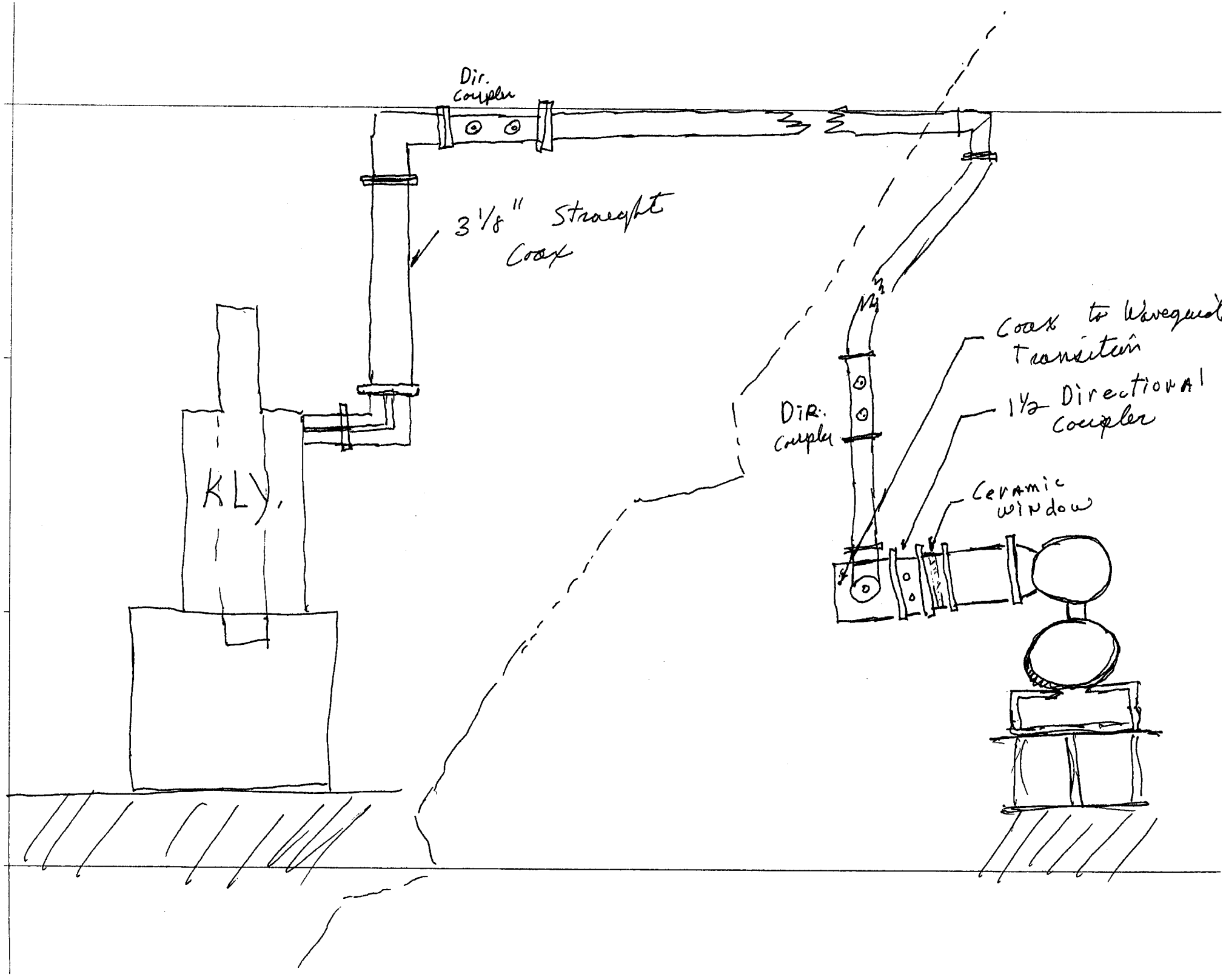
Dir. coupler
3 1/8" Straight Coax
KLY.
Coax to Waveguide Transition
1 1/2 Directional Coupler
Dir. coupler
Ceramic window

LINAC UPGRADE RF BLOCK DIAGRAM

RJP 6/25/90
MODIFIED 7/1/91
R. PASQUINELLI

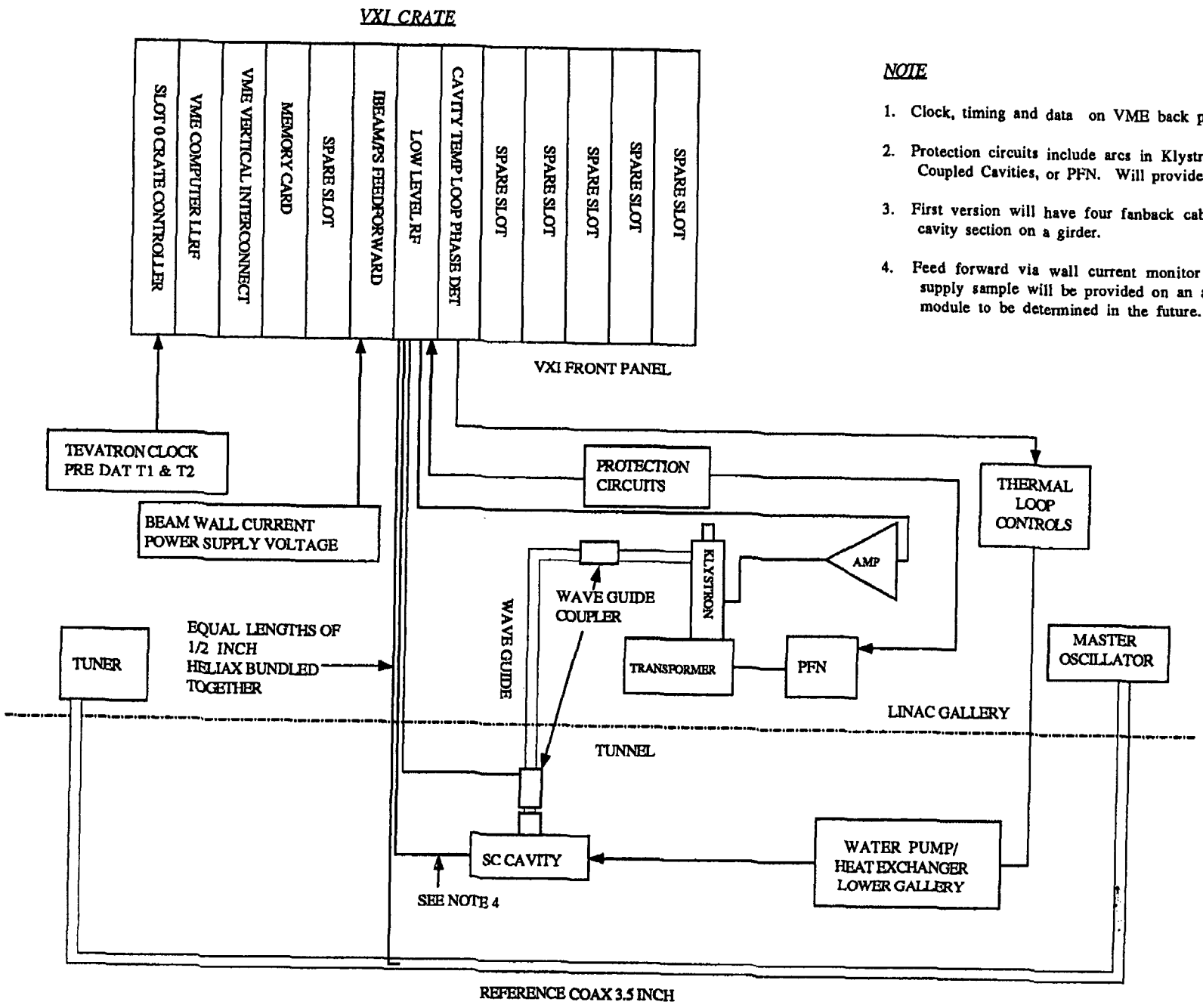

NOTE

1. Clock, timing and data on VME back plane connections.
2. Protection circuits include arcs in Klystron, Side Coupled Cavities, or PFN. Will provide phase flip control.
3. First version will have four fanback cables for each cavity section on a girder.
4. Feed forward via wall current monitor and/or power supply sample will be provided on an additional VXI module to be determined in the future.

LINAC LOW LEVEL RF BLOCK DIAGRAM

RJP 8/24/90
MODIFIED 7/18/91

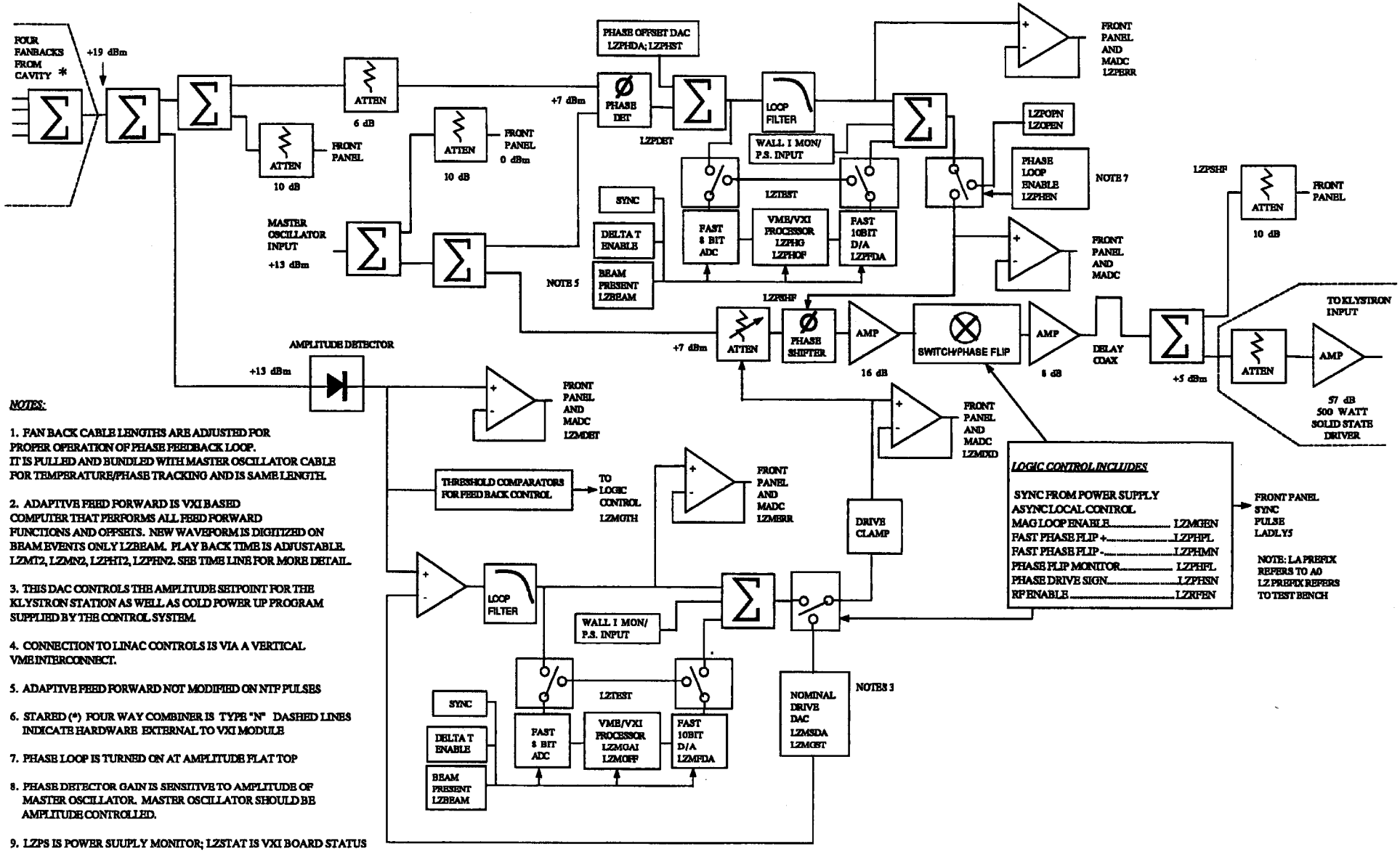

NOTES:

1. FAN BACK CABLE LENGTHS ARE ADJUSTED FOR PROPER OPERATION OF PHASE FEEDBACK LOOP. IT IS PULLED AND BUNDLED WITH MASTER OSCILLATOR CABLE FOR TEMPERATURE/PHASE TRACKING AND IS SAME LENGTH.

2. ADAPTIVE FEED FORWARD IS VXI BASED COMPUTER THAT PERFORMS ALL FEED FORWARD FUNCTIONS AND OFFSETS. NEW WAVEFORM IS DIGITIZED ON BEAM EVENTS ONLY LZBEAM. PLAY BACK TIME IS ADJUSTABLE. LZMT2, LZMN2, LZPHT2, LZPHN2. SEE TIME LINE FOR MORE DETAIL.

3. THIS DAC CONTROLS THE AMPLITUDE SETPOINT FOR THE KLYSTRON STATION AS WELL AS COLD POWER UP PROGRAM SUPPLIED BY THE CONTROL SYSTEM.

4. CONNECTION TO LINAC CONTROLS IS VIA A VERTICAL VME INTERCONNECT.

5. ADAPTIVE FEED FORWARD NOT MODIFIED ON NTF PULSES

6. STARED (*) FOUR WAY COMBINER IS TYPE "N" DASHED LINES INDICATE HARDWARE EXTERNAL TO VXI MODULE

7. PHASE LOOP IS TURNED ON AT AMPLITUDE FLAT TOP

8. PHASE DETECTOR GAIN IS SENSITIVE TO AMPLITUDE OF MASTER OSCILLATOR. MASTER OSCILLATOR SHOULD BE AMPLITUDE CONTROLLED.

9. LZPS IS POWER SUUPLY MONITOR; LZSTAT IS VXI BOARD STATUS LZCNTRL IS VXI BOARD CONTROL. LZADLY IS MADC SAMPLE TIME.

LINAC LOW LEVEL RF
CAVITY TEMPERATURE LOOP PHASE DETECTOR
BLOCK DIAGRAM

RJP 8/30/90
MODIFIED 7/2/91

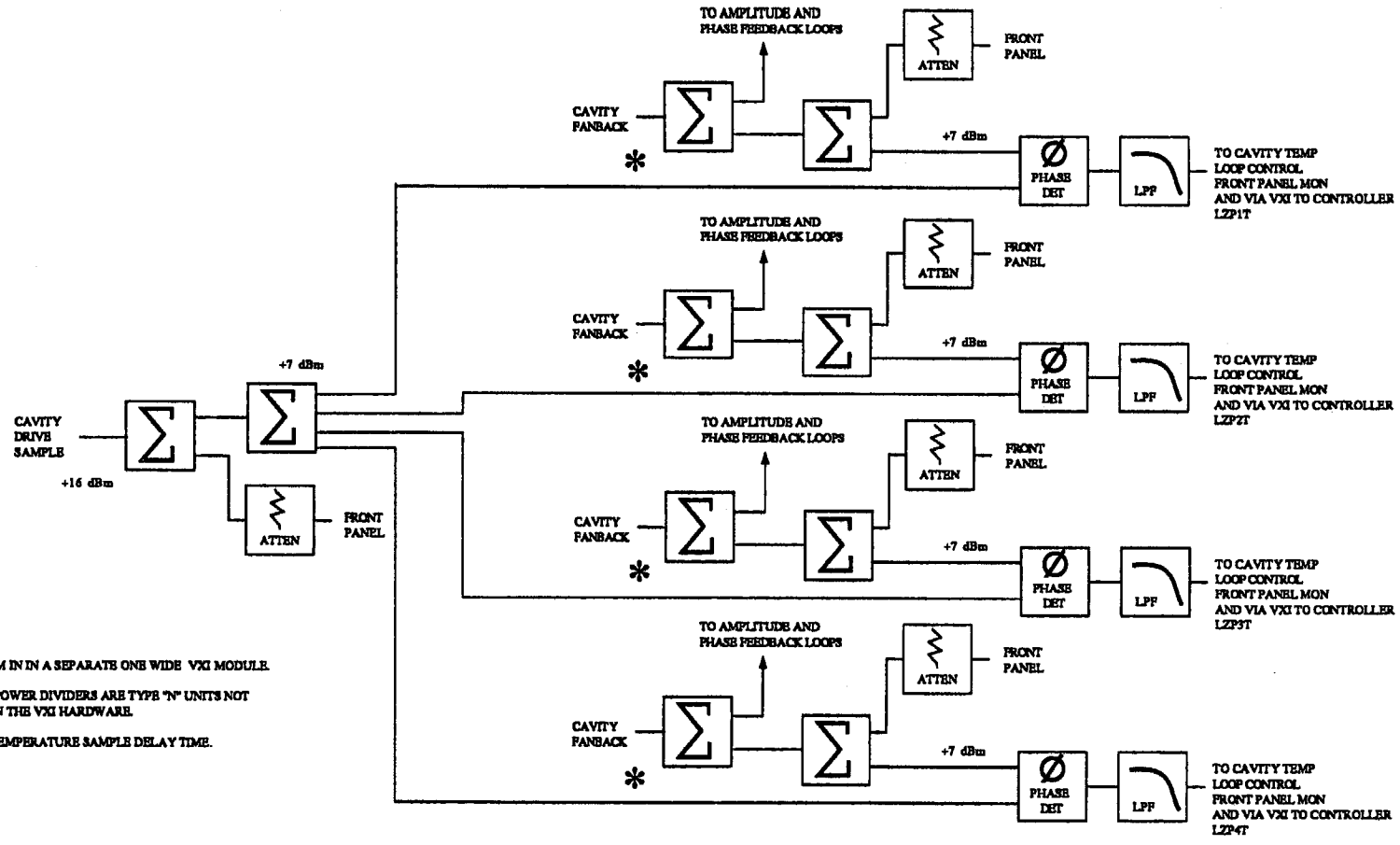

NOTES

1. THIS SYSTEM IN IN A SEPARATE ONE WIDE VXI MODULE.
2. STARED (*) POWER DIVIDERS ARE TYPE "N" UNITS NOT MOUNTED IN THE VXI HARDWARE.
3. LZTDLY IS TEMPERATURE SAMPLE DELAY TIME.

LLRF DATA BASE FOR LINAC TIME LINE

RJP 7/1/91

T0.....START TIME
LZPHT0.....PHASE NO LOAD SAMPLE START TIME
LZPHNO.....PHASE NO LOAD SAMPLE STOP TIME
LZMT0.....MAGNITUDE NO LOAD SAMPLE START TIME
LZMN0.....MAGNITUDE NO LOAD SAMPLE STOP TIME
LZPHT2.....PHASE FFWD PLAYBACK START TIME
LZMT2.....MAGNITUDE FFWD PLAYBACK START TIME
LZPHT1.....PHASE BEAM LOAD SAMPLE START TIME
LZPHN1.....PHASE BEAM LOAD SAMPLE STOP TIME
LZMT1.....MAGNITUDE BEAM LOAD SAMPLE START TIME
LZMN1.....MAGNITUDE BEAM LOAD SAMPLE STOP TIME
LZADLY.....DATA AQUISITION SAMPLE TIME
LZTDLY.....TEMP LOOP DATA AQUISITION TIME
LZPHN2.....PHASE FFWD PLAYBACK STOP TIME
LZMN2.....MAGNITUDE FFWD PLAYBACK STOP TIME
LZFIFO.....FIFO MEMORY TIME LENGTH

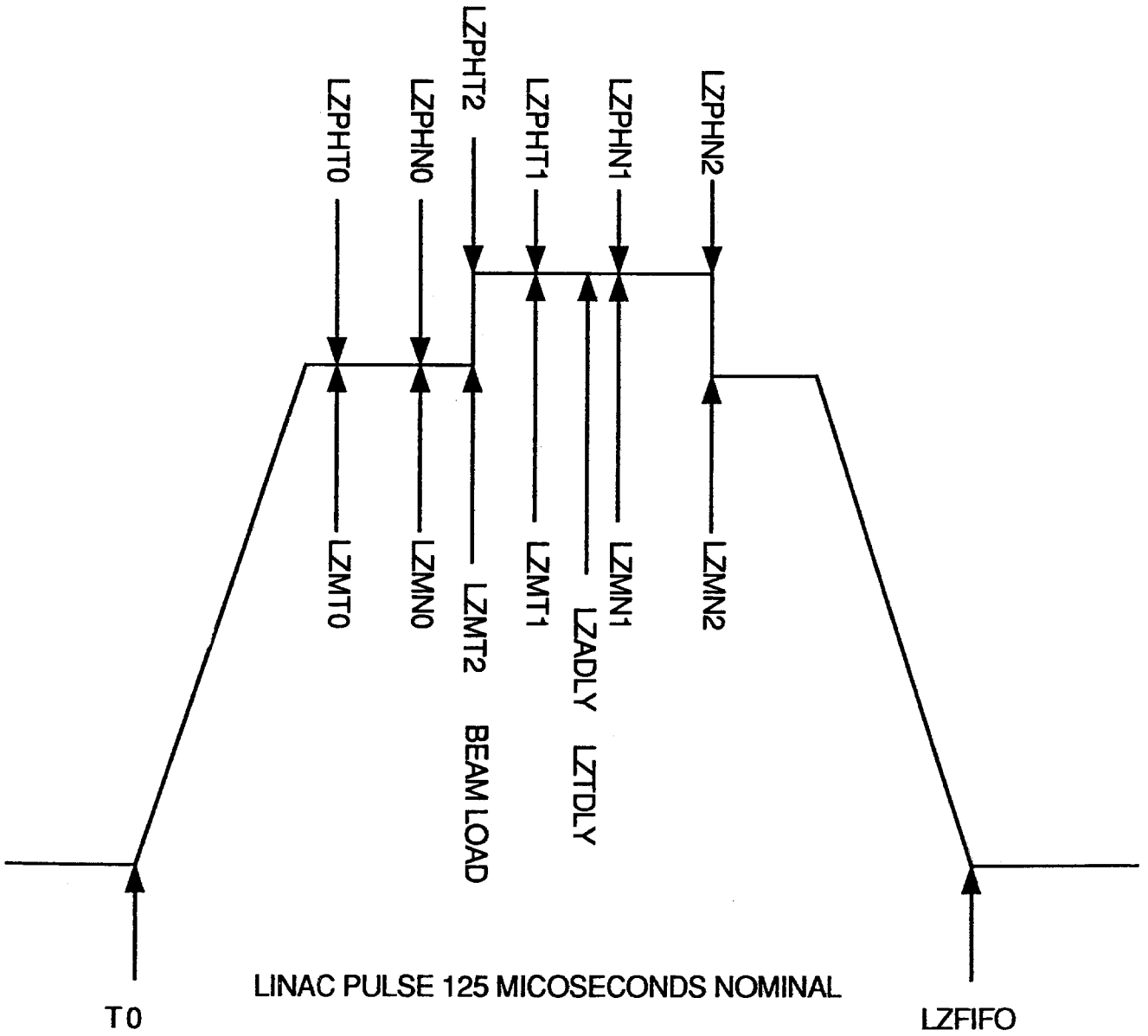

LLRF test

AØ NO CLOSED LOOPS
8.5 MW

17-Jul-91
13:23:55

LeCroy

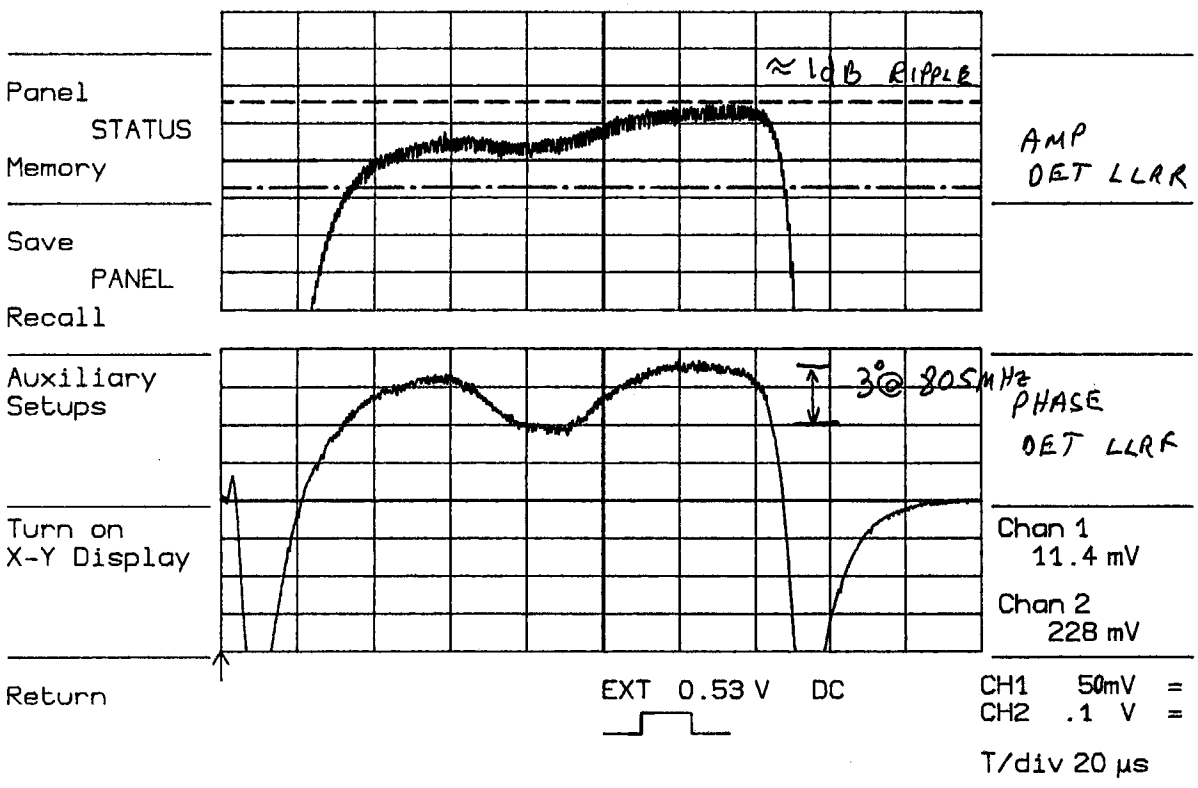

LAPOPN

open Loop PHASE
DAC 3.5V

φ SET DAC
0 V

LLRF test

AΦ WITH CLOSED LOOPS

8.5 mW

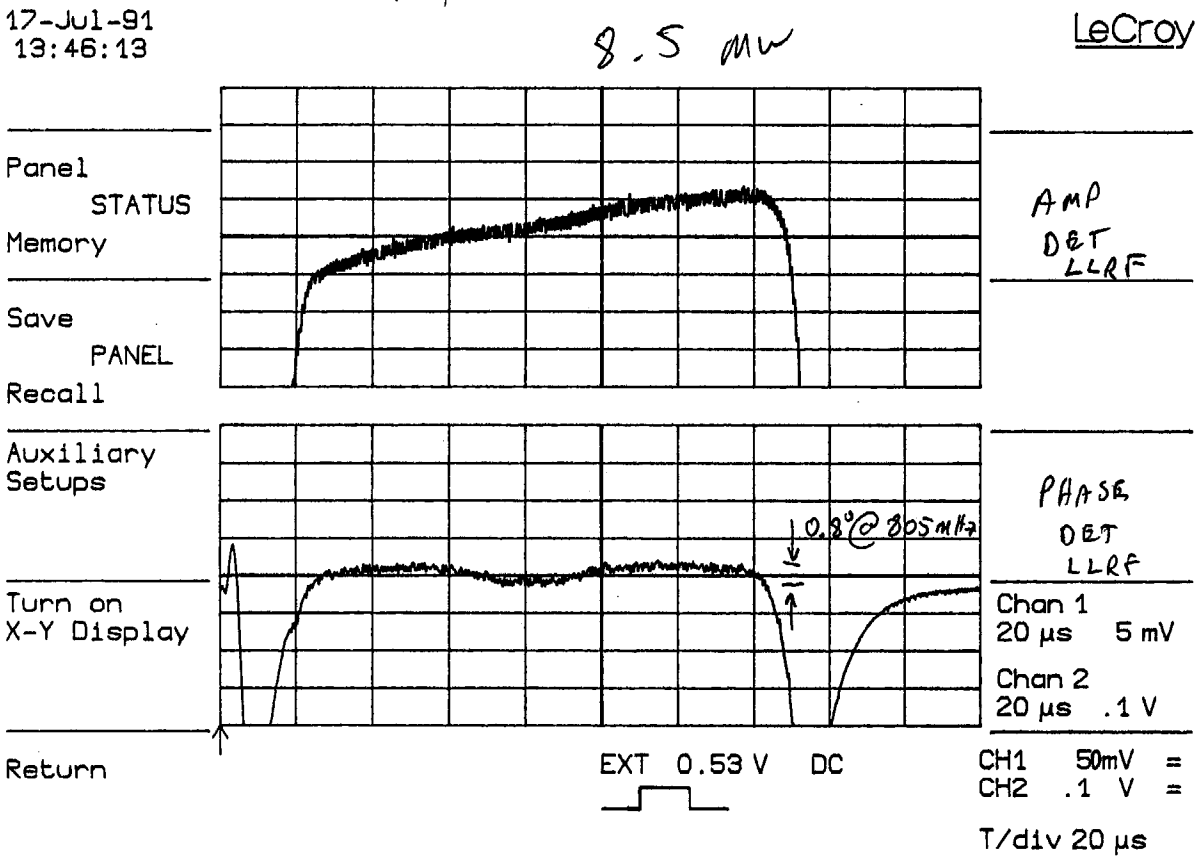

LAPHDA

0 V Phase set

DAC

LLRF test

AΦ WITH CLOSED LOOPS

8.5 MWATTS

17-Jul-91
13:41:30

LeCroy

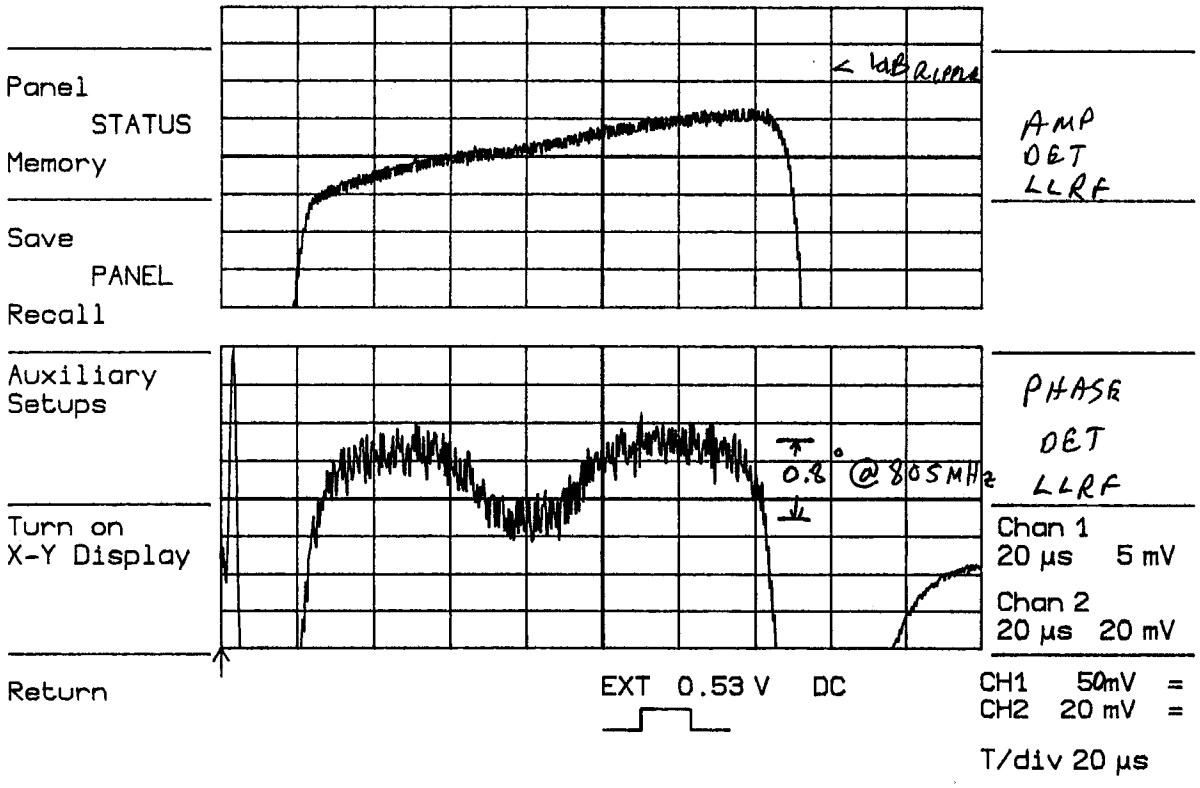

LAMSDA
MAG SET DAC
1.497

LLRF Test

AΦ COMPARISON

OPEN VS CLOSE LOOP

MAG RESPONSE @ 8.5MW

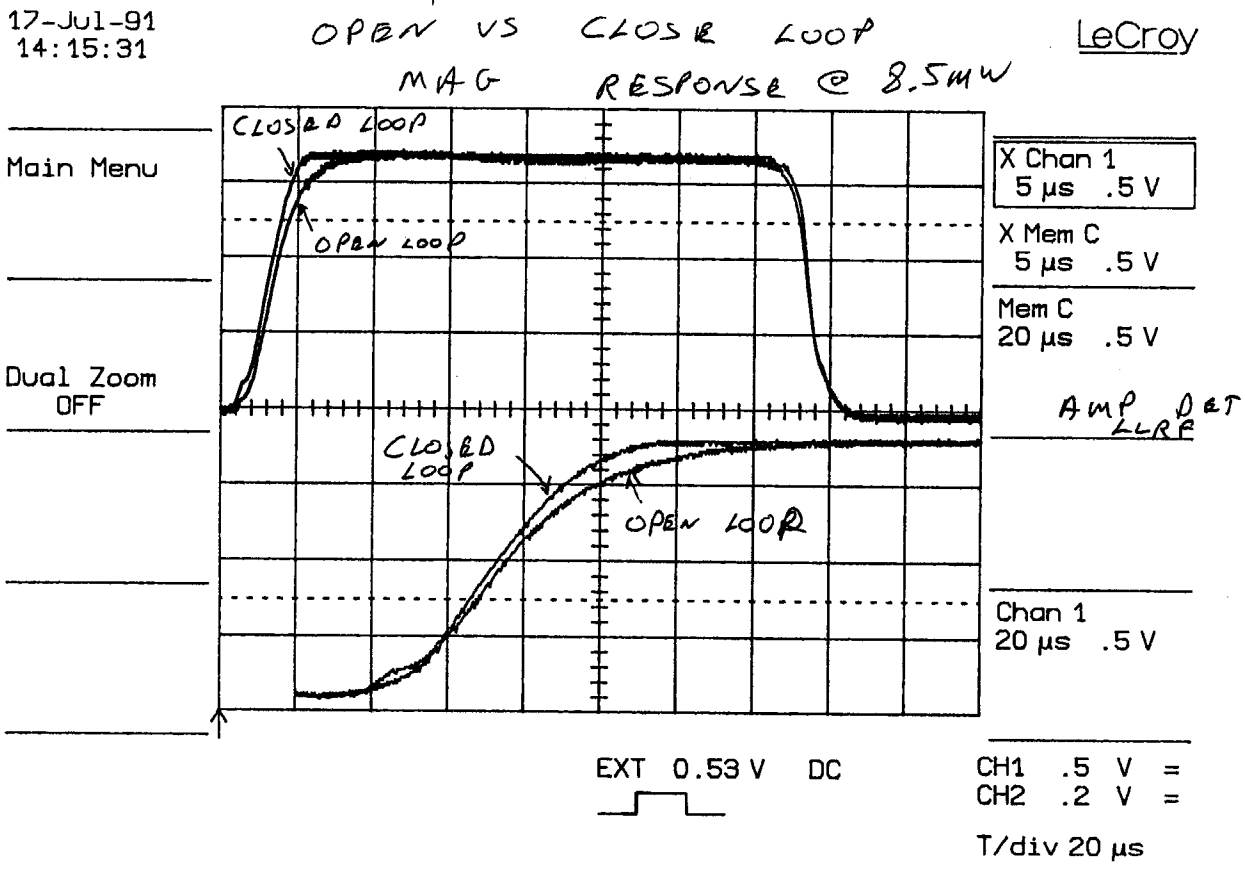

LLRF test

AΦ MAG & Φ CLOSED LOOPS

17-Jul-91
14:09:19

LeCroy

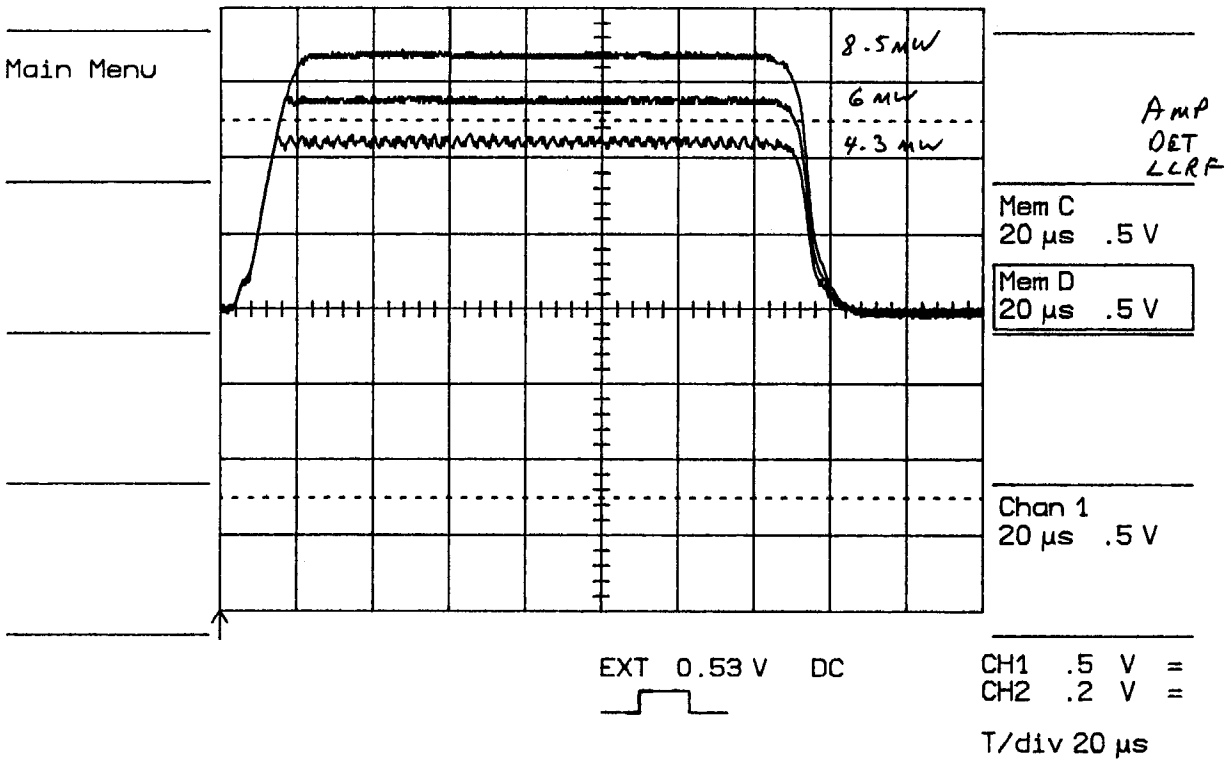

MAG SET POINT DAC LAMSDA	KLYSTRON POWER MW
1.5v	8.5
1.38v	7.0
1.212v	6.0
1.09v	5.0
0.974v	4.3

LLRF Test

AΦ WITH CLOSED LOOPS

8.5 MW

17-Jul-91
14:00:51

LeCroy

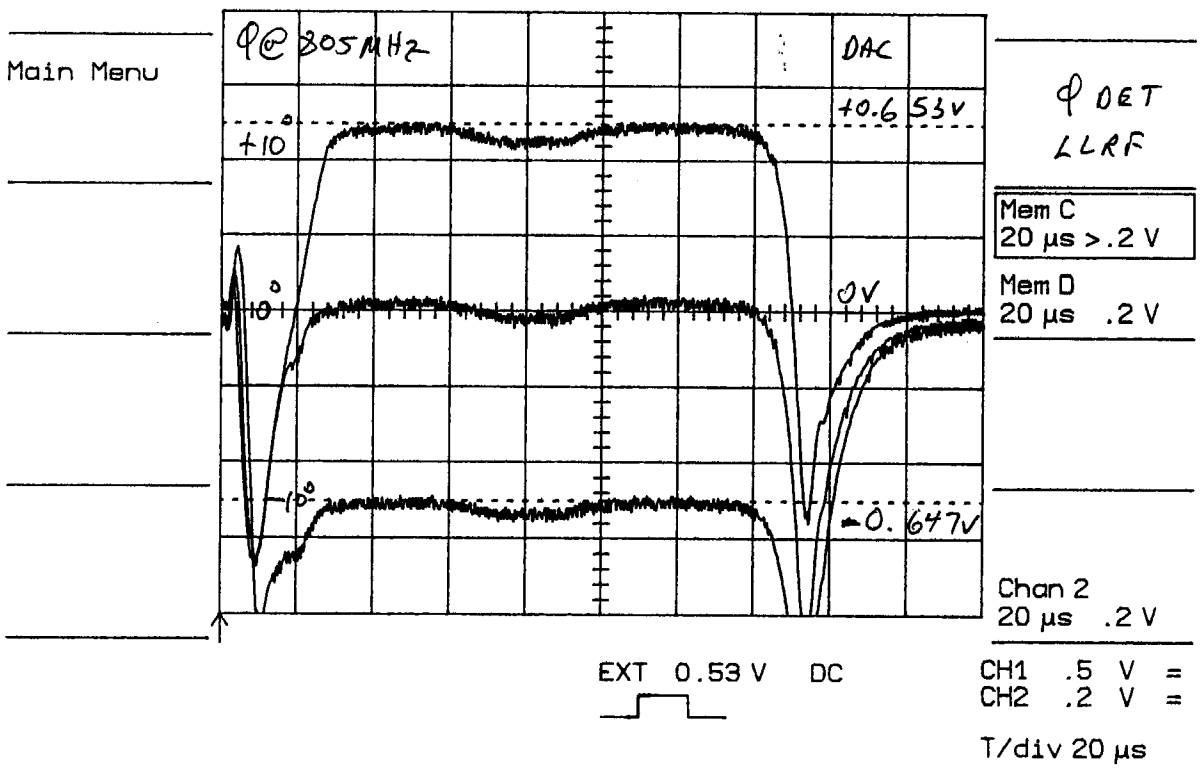

$\boxed{\text{LAPHDA}}$ = PHASE SET PT DAC

Cost Estimate for Linac Upgrade Low Level RF	RJP		
Cost per RF Station	9/21/90	7/16/91	
ITEM	**COST**	**COST**	
VXI mainframe	$2,700	$5,600	Waitng to order balance of nine
VXI slot 0 translator	$400	$800	Waitng to order balance of nine
VXI adapter modules for VME	$800	$540	Waitng to order balance of nine
Motorola MVME133-A20 computer	$1,800	$1,690	Held up in purchasing
Motorola VME memory card	$670	$560	Held up in purchasing
VXI enclosure for LLRF module	$200	$200	Waitng to order balance of nine
RF circuit board	$200	$400	Waiting for final prototype test
Analog and digital electronics	$700	$700	On order
RF electronic components	$1,000	$1,000	Waiting to order balance of phase shifters
Cavity phase detector module	$0	$500	Detailed design has not yet started
Heliax 1/2" coax	$500	$3,000	Order on Hold???
Connectors	$100	$1,200	Order on Hold???
SUBTOTAL	**$9,070**	**$16,190**	**Approximately $150K needs to be spent**
Total for ten stations plus two hot spares	**$108,840**	**$194,280**	**Does not include cost of vertical interconnect**
two transition, seven stations, one debuncher, two spares			
Man Power Requirements	**Man Months**	**Man Months**	Total from start of project
Engineering	6	12	New time estimates include installation and timing of all cables
Technician	6	24	

M. MAY
18 JULY 91

LINAC UPGRADE

TRANSITION AND DEBUNCHER CAVITY REPORT

1. THE 16 CELL AND THE 4 CELL TRANSITION CAVITIES ARE BRAZED AND TUNED. THEY ARE NOW IN THE PROCESS OF HAVING THEIR WATER MANIFOLDS INSTALLED.

2. THE POWER CELLS FOR THE TRANSITION CAVITIES ARE BEING MACHINED AND FABRICATED. THEY WILL BE COMPLETED BY AUGUST 9TH.

3.THE POSITION OF AN ION PUMP PORT ON THE POWER CELL NEEDS TO BE DETERMINED.

4. THE DEBUNCHER CAVITY IS OUT FOR BID ON THE FIRST MACHINING STEPS OF THE MAIN CAVITY PIECES AND THE SIDE COUPLED CELLS.

5. THE POWER CELL, SIDE COUPLED CELL IS THE SAME AS MOD. 7, AND IS IN THE PROCESS OF BEING MACHINED AND BRAZED.

6. THE POWER CELL FOR THE DEBUNCHER CAVITY IS IN THE DRAFTING STAGE. THE DRAWINGS SHOULD BE COMPLETED AND READY FOR MACHINING IN TWO WEEKS.

7. THE TYPE OF VACUUM FLANGES ON THE DEBUNCHER CAVITY FOR THE BEAM LINE CONNECTIONS NEEDS TO BE DETERMINE.

J. FRITZ 7/18/91

TRANSITION SECTION MECHANICAL

GIRDER & CRADLES

THESE ARE COMPLETE

SUPPORTS FOR CRADLES ARE COMPLETE

VACUUM HEADERS

COMPLETE BY 8-5

ION PUMPS (220 L/S)

8 ARRIVED TODAY (7-18)
2 DUE (7-23)
26 DUE (8-6)

QUAD SUPPORTS

- EST. DELIVERY 8/23

BEAM TUBES (DRIFTS)

?

FUNDING OR MANPOWER

- NO PROBLEM ENVISIONED
- NO EXCEPTIONAL COSTS

To Jim MacLachlan

July 15, 1991

LINAC UPGRADE STATUS REPORT
GLENN LEE
7/12/91

TRANSITION SECTION:

Layout drawings complete, diagnostic device stands designed but not detailed, beam pipe not detailed vacuum manifold in shop.

BUNCH LENGTH DETECTOR:

Mark I design not suitable, new design in progress, no drawings yet.

BEAM PIPE BETWEEN SECTIONS:

Design and drawings complete and in shop.

Wire detector parts complete, assembly starts 7/15/91.

BPMs assembled except for four rebuilds, calibration in progress.

Device supports designed, module one parts in shop for trial assembly.

WAVEGUIDE:

Layout drawings done, not detailed.
Klystron radiation shield.
Layout finished, not detailed.

KLYSTRON SOUND BOX:

Designed, drawings in progress.

J. Satti

Debuncher

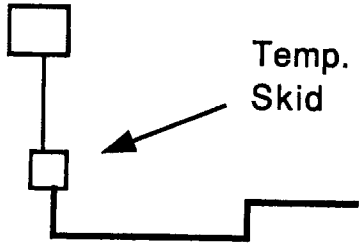

Temp. Cntrl
Skid w/HE

EXISTING BOOSTER CHILLER

~~New Basement~~
~~60° LCW (Extension~~)

Transition Section

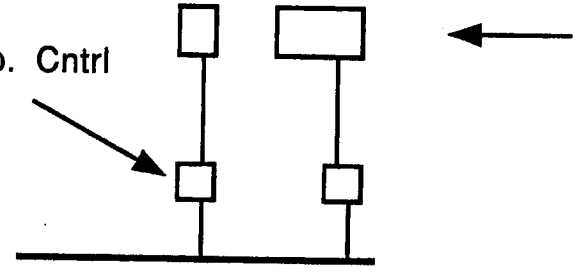

Temp. Cntrl
Skid

New Basement
60° LCW

Booster 95° LCW (Start) CHECK WITH BOOSTER

Booster Chilled with Skid (Final)

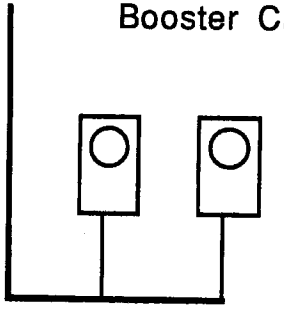

Lab Rm. 7

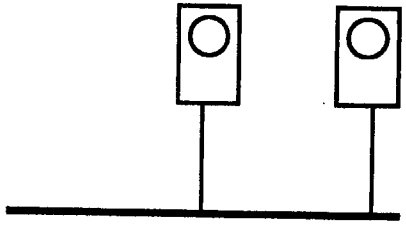

New Klystron
90° LCW

Transition & Debuncher Cooling Proposal

John Satti 7/18/91

McCrory

Diagnostics Status/Progress

BPMs: 28 made and ready to weld into the beamline (a couple of leakers need new feedthroughs).

Calibrating right now (summer student); complete in 3 weeks

Trim Magnets: 5 complete (proof of principle) out of 17.

Jim & Ray can make two per day (if pushed), but presently there is a conflict with the lathe.

Wire Scanners: Parts are here for 15. Assembly to begin in the fall.

Note: we have one installed at the ouput end of tank 5 right now and it works fine.

Resistive Wall Monitors: Prototype made and operational, but the LF output has a resonance which McConnell will fix.

All parts are on hand.

1 month machine shop time to make all the cans, tech can assemble them quickyl once the can is made.

Bunch Length Detector: Preliminary prototype in the 200 MeV line now.

Signal/noise >> 1 (about 5); so this device will work for H^- beam.

Moretti has designed adequate 805 MHz cavity to deflect the secondary electron beam; Lee has drawn it; present status unknown.

Will use 500 W rf amp--same as the klystron driver.

Will strive to install fully operational prototype into the 200 MeV line in September.

Diagnostics Software

1. **Delta-t**: Have essentially all the hardware for simulating the procedure. Much of the software is operational. Owens and I need to dedicate 2 weeks to getting this back off the ground again.
2. **Steering**: Will be Junck's project as soon as the BPM calibration is done
3. **Emittance program(s)**: can re-use old programs with modifications from Harfoush; may need some effort to do longitudinal emittances.

Controls status/progress

No problems!
Will install new controls system for old linac at EOFTR.