FERMILAB-LU-174

DIAGNOSTICS FOR THE 400 MEV FNAL LINAC

Elliott S. McCrory and Glenn Lee
Fermi National Accelerator Laboratory*, Batavia, IL 60510
Robert C. Webber
SSC Laboratory*, Dallas, TX 75237

Introduction

The last four 201 MHz alvarez tanks of the twenty-year-old, 200 MeV Fermilab Linac are being replaced by seven high-gradient (7 KV/m), high-frequency (805 MHz) side-coupled-cavity structures to produce a 400 MeV beam for injection into the Booster[1]. Good, reliable beam diagnostics are an important factor in the success of this project.

The commissioning and operation of the new linac present several interesting challenges which the beam diagnostics system will address.

✓ In order to increase the efficiency of the cavities (raising the shunt impedance), the aperture of the new linac is only 3 cm; the aperture of the old linac is 4 cm, so good beam steering will be very important.

✓ To increase the achievable gradient in the side-coupled linac, the fourth harmonic of the alvarez linac, 805 MHz, has been chosen as the resonant frequency. The smaller longitudinal phase-space will make matching into the new structure difficult. Therefore, measuring and understanding the longitudinal match between the two structures also will be very important.

✓ The space available for diagnostics is limited. There is only the four-meter transition section and $3\beta\lambda/2$ drifts between each accelerating section for the diagnostics. Therefore, the diagnostics elements must be small. (Terminology: sixteen side-coupled cavities are braised together to make a *section*, four sections are connected together to make a *module*, a module is powered by a klystron.)

✓ Our linac, as reliable as it is, has yielded precious little information about the nature of its beam, especially in its middle where injection to the new linac is to occur. Thus, many plans and designs for the new linac, the transition section in particular, rely on the existence of excellent diagnostics to identify and correct unexpected features of the beam revealed during commissioning.

✓ And, finally, we will need to commission the new linac as quickly as possible, so it will be important to have reliable diagnostics as soon as commissioning begins.

Beam position/steering, wire scanners, a new-style bunch length monitor, beam loss monitors and special beam-phase pick-ups are being incorporated into the new linac. Figure 1 shows the mechanical layout of the inter-section regions for the first accelerating module, the tightest overall fit.

Diagnostics systems

Beam Position Monitors and Steering Correction

A quadrupole-stripline, non-intercepting beam position monitor (BPM) has been designed and prototyped, see Figure 2. The four plates each subtend 20°. The inside diameter of the monitor is 3.25 cm. The overall length is 4.0 cm; this small dimension is chosen as a compromise between minimum space and smaller signal from a shorter monitor.

Compact, picture-frame iron dipole magnets of the type used currently are to be used in the new linac. These magnets can be made quite short, and we plan to make them as short as 4 cm. A problem presently under investigation is if the proximity of these magnets to the quadrupole focusing magnets in each inter-section drift causes any problems.

Correcting the steering in the new linac is going to be easier than it has been in the old linac. The procedure for correcting the trajectory of the beam in the old linac has included the measurement of the beam trajectory followed by the physical realignment the drift tubes. This laborious process requires opening the linac tanks and, with a surveying crew present, moving the drift tubes. In the new linac, we plan to have two BPMs in every module, producing four position readings per 2π phase advance (79° per FODO cell), enough readings to accurately measure the steering and the betatron amplitude. In particular, we will put several BPMs and correction elements in the transition section to insure

*Operated by the Universities Research Association under contract with the U.S. Department of Energy.

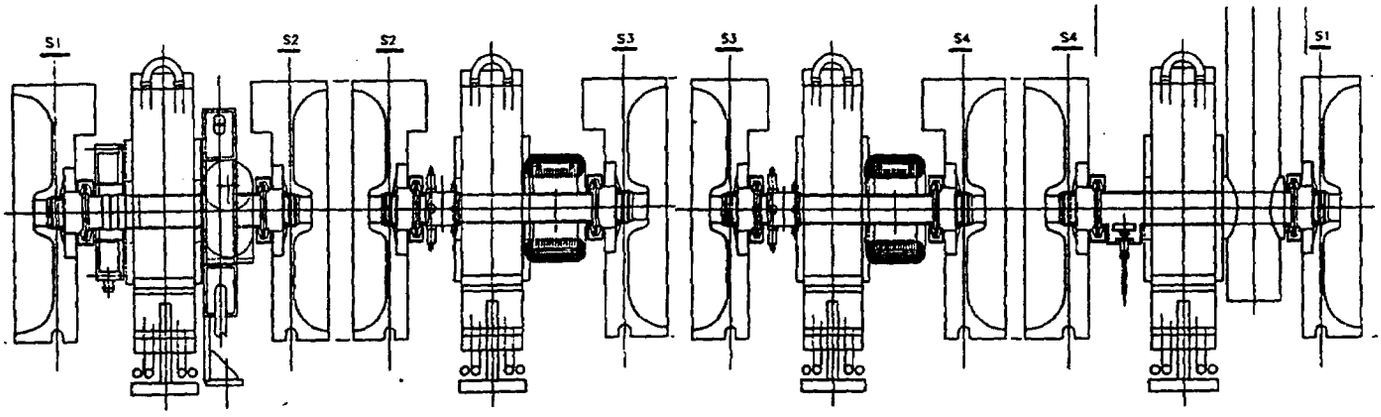

Figure 1, Mechanical layout of the beam diagnostics within the first accelerating module of the new 400 MeV Fermilab Linac.

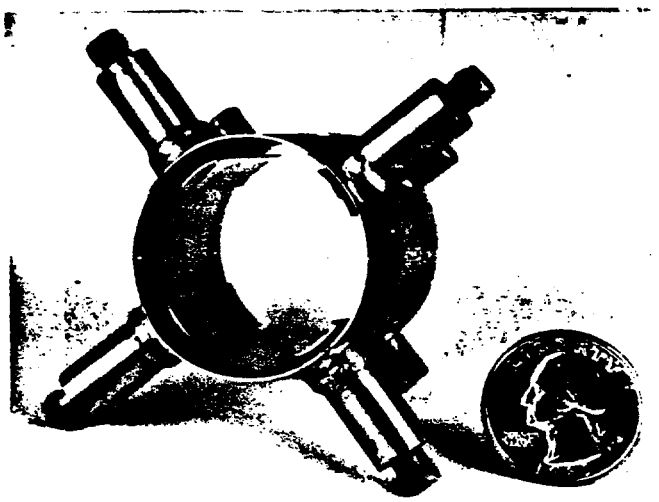

Figure 2, a Beam Position Monitor for the new 400 MeV Fermilab Linac

that the steering starts off right. Alignment of the four sections and four quadrupoles on a "strongback" will lead to alignment accuracies of better than 0.01 cm through the module; careful module-to-module alignment will produce alignment errors of about 0.025 cm. [2]. The steering correction needed for this level of alignment is 0.5 cm, 0.15 mrad maximum at the end of the linac. A deflection field of around 100 gauss-cm is needed to correct for this. 600 gauss on a 4 cm picture-frame magnet is not difficult.

The BPMs are read out by an RF module/decoder similar to the one presently in use [3]. The old design has been modified to increase the bandwidth to approximately 20 MHz (from 1 MHz).

A linac control system local control station [4] will run a local application program to actively correct the steering of the entire (new) linac on a pulse-by-pulse basis.

Wire Scanners

A new, compact two-plane wire scanner has been designed, see Figure 3. Its overall length is 6.5 cm; its length along the beam is 5 cm. Three wire scanners will be placed in the transition section and at the beginning and end of the new linac. They are to be located at a transverse waist so that the emittance in that vicinity can be measured.

We have built the first wire scanner and are preparing to install it at the exit of tank five of the present linac. This is the injection point into the new linac, so we hope to determine the Twiss parameters at that point[5].

Bunch Length Monitor

A technique exists to accurately measure the phase extent (*a.k.a.* bunch length) and the phase density of a linac beam [6]. This idea was invented by R. Witkover [7] and refined by A. V. Feschenko [6]. We have consulted with Feschenko and have built two prototypes.

Referring to the reference [8] and to Figure 4, the bunch length monitor, or BLM, works as follows. The primary ion beam impinges on a wire, 1, which is at high voltage, V. The passage of the beam through the wire causes secondary electrons to be liberated from the atoms in the wire. Free secondary electrons near the surface migrate out of the wire and are accelerated

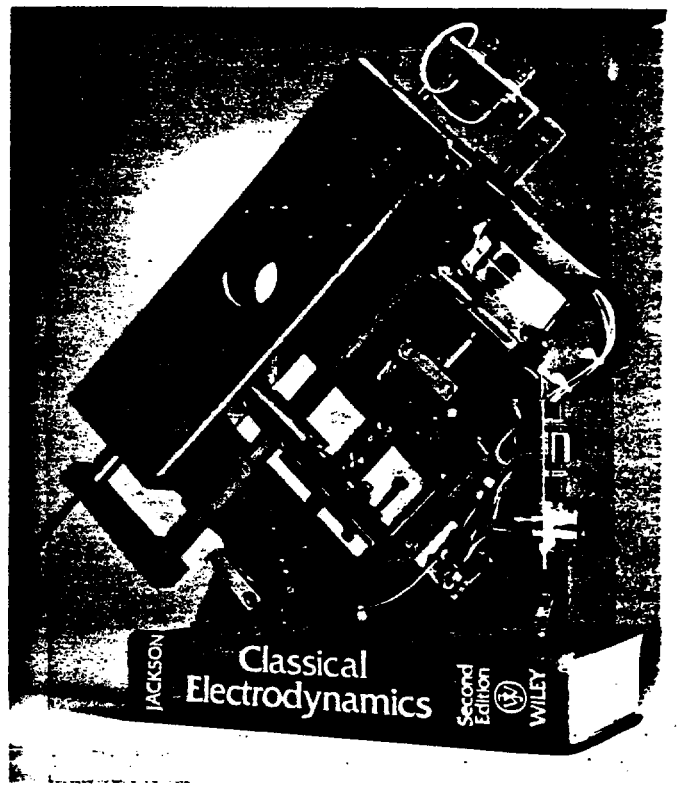

Figure 3, a wire scanner for the new 400 MeV Fermilab Linac

radially away from it by the voltage, V, to the slit, 2. The electrons which get through the slit then pass between a pair of deflector plates, 3, which are excited at opposite phase by a voltage equal to

$$A_0 \cos(\omega t + \varphi)$$

where ω is the bunching frequency of the beam and φ is an arbitrary and adjustable phase angle. (Our deflector will probably be a cavity excited in a deflecting mode.) The electron beam is focused by an electro-static einsel lens, 4, onto a slit, 5, and the particles which pass through the slit are detected by an electron detector, 6. Plotting the phase angle of the deflecting voltage, φ, versus the signal on the detector produces a distribution which is proportional to the longitudinal density of the ion beam.

The resolution of this device is determined by three kinds of factors: limits set by Nature, assembly/alignment precision and the choices made for the optics of the secondary electron beam, see Table 1. Their predicted effect on the resolution of the device is listed in Table 2 and compared with the results obtained by

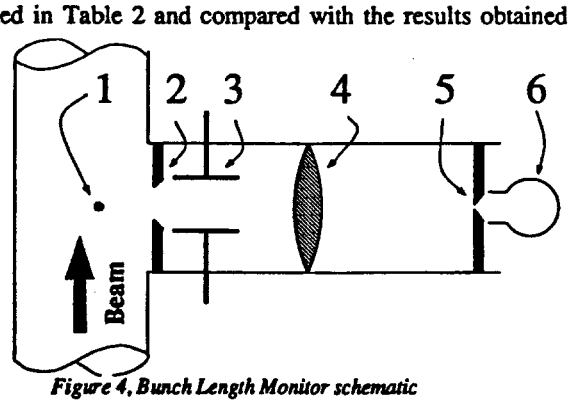

Figure 4, Bunch Length Monitor schematic

Table 1

Limits on the Resolution of a Bunch Length Monitor

① *Natural Limits*

a. Energy and Angle spread of Secondary Electrons

b. Ejection time spread of Secondary Electrons

② *Geometric Precision*

a. Alignment of wire, lens and electron detector

b. Deminsions of wire and final slit

③ *Optics of Secondary Electron Beam*

➸ Einsel lens optics:

a. Path length differences

b. Lens dimensions, aberrations

c. Magnification

➸ Deflector plates:

d. Strength of deflection

e. Fringe fields

f. Max deflection within deflector (related to transit time)

Feschenko [9]. The most severe effect at 805 MHz is the time it takes for the secondary electron to actually be ejected from the wire. The best measurement to date indicates this time is no greater than 6 picoseconds [10]. The other major effect worth noting is the drift-time differences among electrons within the secondary electron beam. The monitor is time sensitive only in the region from the wire to the deflector, so velocity differences or path-length differences in the secondary electron beam to the deflector should be reduced. Velocity differences arise from the thermal velocity variations in the secondary electron beam (expected to be around 3 eV, but with tails out to several tens of eV [7]); increasing the voltage on the wire reduces the effect of the velocity spread. Path length differences are reduced by either reducing the aperture of the device, by placing the deflector as close to the wire as possible or by both.

My improvements should come from: higher secondary electron beam energy, better alignment, and reducing the effective path lengths of the secondary electrons by placing the deflector in front of the lens. Our goal is to obtain a resolution of approximately 1° at 805 MHz, a factor of 3 improvement over Feschenko's 0.8° at 198 MHz. Non-linear effects (3b, e and f) are not addressed at this time.

Our design, with the deflector in front of the lens, requires a rather high gradients, around 2KV/cm, to achieve adequate resolution. We are working on a design for a suitable deflector.

We have tested the optics of the secondary electron beam, without a deflector, in the lab and had good results. We have obtained an image on a thick phosphorus screen approximately 0.030 cm wide using a 0.013 cm wire thermionically emitting electrons. A prototype is being built to put in the 200 MeV beam, again without a deflector, to test if primary electrons from the H- beam significantly affect the device.

We want to install three BLMs in the transition section, two in the 400 MeV transfer line and one near the end of the linac.

The Δt procedure

A procedure has been established at several laboratories, most notably LAMPF, to accurately set the phase and gradient of a series of linac accelerating modules. This procedure, referred to as the "Δt procedure," is described elsewhere at this conference [11]. We are installing a resistive wall monitor [12] at the entrance to each accelerating module to facilitate this measurement. The resistive wall monitor, developed for use in the Tevatron, has a bandwidth of 6 GHz, so some bunch length information can be obtained.

Table 2

Resolution of Proposed and Existing BLMs

BLM Type \ Resolution Effect	1.a	1.b	2.a	2.b 3.d	3 a,c	Total
Fermilab	**0.04**	**<1.74**	**0.3**	**0.7** (3KV/cm, 15 cm)	**0.1**	**0.77 (1.90)**
Feschenko	**0.29**	**<0.43**	**0.2**	**0.4?**	**0.21**	**0.57 (0.72)** (200 MHz)

Other Devices

We will also include standard beam toroids, one per module, and beam loss monitors in the new linac.

Conclusions

In order to commission the new 805 MHz/400 MeV Fermilab Linac in the allotted time, extensive and accurate beam diagnostics are to be used. In addition to fairly standard beam position monitoring and correcting, we plan to include in the new linac: wire scanners for emittance measurement, Δt pickups to aid in setting the phase and gradient of the high-power klystrons, and bunch length monitoring devices throughout the linac.

References

[1] Robert Noble, "The Fermilab Linac Upgrade Project," this conference, Talk number MO1-01.

[2] "Fermilab Upgrade Conceptual Design, Revision 3."

[3] E. S. McCrory, G. Lee, R. C. Webber, "Observations of Transverse Instabilities in the FNAL 200 MeV Linac," 1988 Linear Accelerator Conference proceedings, Williamsburg, VA, pp 182-184; and R. Webber, *et al.*, "A Beam Position Monitoring System for the Fermilab Booster," Proceedings of the 1987 IEEE Particle Accelerator Conference, IEEE Catalog 87CH2387-9, pp 541-543.

[4] E. S. McCrory, R. W. Goodwin and M. S. Shea, "Upgrading the Controls for the Fermilab Linac," this conference, talk number TU4-63.

[5] We are also installing a resistive-wall monitor, similar to the ones in the Tevatron [12], to give us some clue on the longitudinal nature of the beam at that point.

[6] A. V. Feschenko and P. N. Ostroumov, "Bunch Shape Measuring Technique and its Application for an Ion Linac Tuning," 1986 Linac Conference Proceedings, pp 323-327.

[7] R.L. Witkover, "A Non-destructive Bunch Length Monitor for a Proton Linear Accelerator," NIM 137 (1976), #2, pp 203-211.

[8] "Design Considerations for a Bunch Length Monitor for the Fermilab Linac" by E. McCrory; FNAL Linac Upgrade note number 161.

[9] Alexander V. Feschenko, personal communications, June, 1990.

[10] A.V. Feschenko told me of a Soviet Atomic Physics paper which quotes this result.

[11] T. Owens and E. McCrory, "The Δt Experiment at Fermilab," this conference, talk number TH4-51.

[12] C.D. Moore, *et al.*, "Single Bunch Intensity Monitoring System Using an Improved Wall Current Monitor," proceedings of the 1989 IEEE Particle Accelerator Conference, Vol 3, pp 1513-1515.