Author	Section	Page
John A. Satti	Main Accelerator	1 of 14
Date	**Category**	**Serial**
June 27, 1968	0423	EN-109

MAIN ACCELERATOR BENDING MAGNET COILS

Since the last January 1968 Design Report, studies were made by Dr. L. C. Teng with the LINDA and TRIM two-dimensional magnet design computor programs. As the result of these studies, the topology and parameters of the bending-magnet coils has changed.

The latest current values for the bending magnets are:

(400 BeV)	I = 4680 A
(200 BeV)	I = 2270 A

In both the B_1 and B_2 magnets the turns in the gap region will be of a different cross section than those in the outer window in order to match the desired core configurations. The upper and lower halfs of the B_2 magnet coil are connected in series with four turns in the gap. In the B_1 magnet the upper half of the coil is connected in parallel with the lower half and the coil has three turns in the gap.

The effect on the field due to the insulation gap was analyzed by Dr. F. C. Shoemaker and this showed that the following insulation thicknesses are needed for the respective conductors cross sections:

Gap insulation for B_2 magnet

.044 mid-plane insulation
.040 wall, ground insulation

Gap insulation for B_1 magnet
.064 mid-plane insulation
.040 wall, ground insulation

The water hole diameter in the conductors is determined by the cooling water temperature rise and the pressure drop across one water circuit. It was decided that for the 400 BeV energy a water temperature rise of 16° C and a pressure drop of about 200 psi was adequate for one water circuit. For the 200 BeV energy a pressure drop in the coil should be about 100 psi; for a certain water hole diameter the pressure drop will determine the flow and thus the temperature rise of the water.

Tenative Parameters of Bending - Magnet Coils

	B1	B2	
Number of turns	12 (24 - 1/2 turns)	16	
Outside Dimensions of Copper Conductor	0.671 x 0.677 (3 turns)	1.058 x 0.938 (4 turns)	in^2
	0.614 x 0.626 (9 turns)	0.948 x 0.954 (12 turns)	in^2
Diameter of Cooling Hole	0.285	0.340	in
Copper Area	0.387	0.898	in^2
	0.317	0.810	in^2
Cooling Circuits	6	4	
Inductance	6.47	7.95	mH
Resistance (40°C)	6.92	7.39	mΩ

	200 BeV	400 BeV	200 BeV	400 BeV	
Maximum Current	2270	4680	2270	4680	A
Maximum Current Density	3577	7375	2801	5775	A/in^2
Average Power	15.6	66.6	16.7	71.2	kW
Temperature Rise per Pulse (no cooling)	0.25	2.2	0.16	1.4	°C
Cooling-Water Temperature Rise	5.5	16	5.5	16	°C
Total Water Flow	10.8	15.8	11.5	16.9	gpm
Pressure Drop across One Water Circuit	100	200	100	200	psi

Subject

MAIN RING BENDING MAGNETS

A RECENT STUDY*, WITH THE TWO-DIMENSIONAL MAGNET DESIGN COMPUTER PROGRAM, OF THE B_1 AND B_2 BENDING MAGNETS SHOWS THE FOLLOWING PARAMETERS TO BE FEASIBLE:

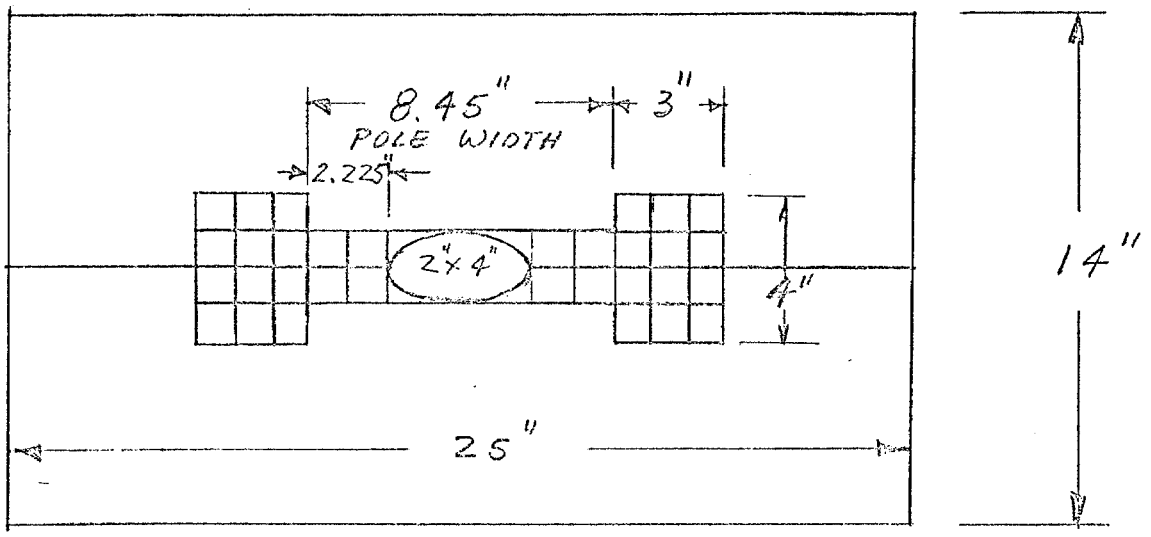

B_2 BENDING MAGNET

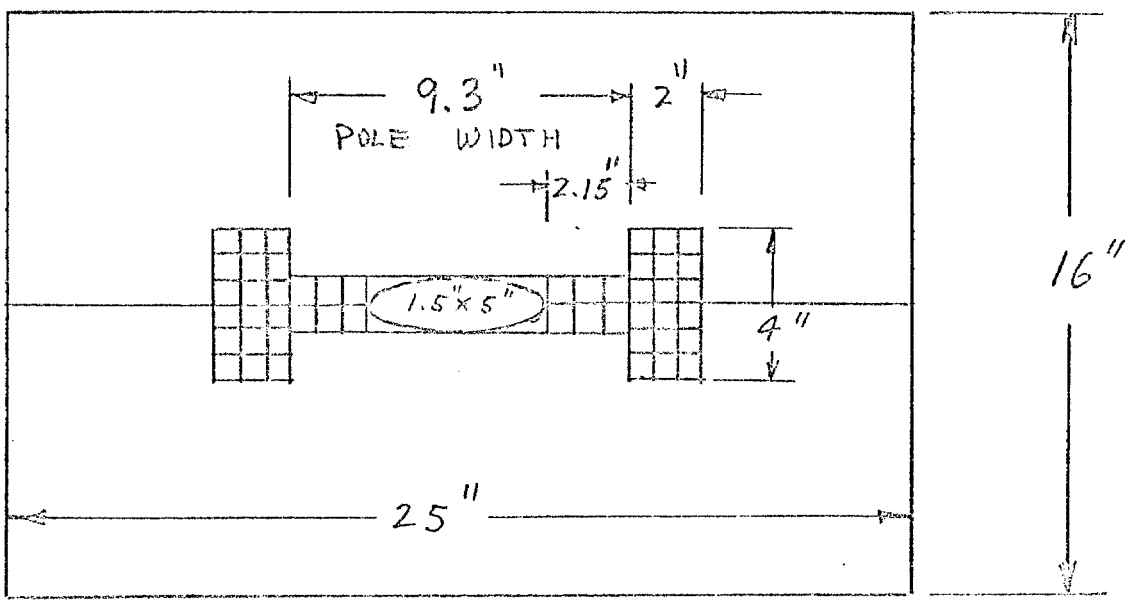

B_1 BENDING MAGNET

* DR. L.C. TENG

Subject

B_2 MAGNET COIL DESIGN

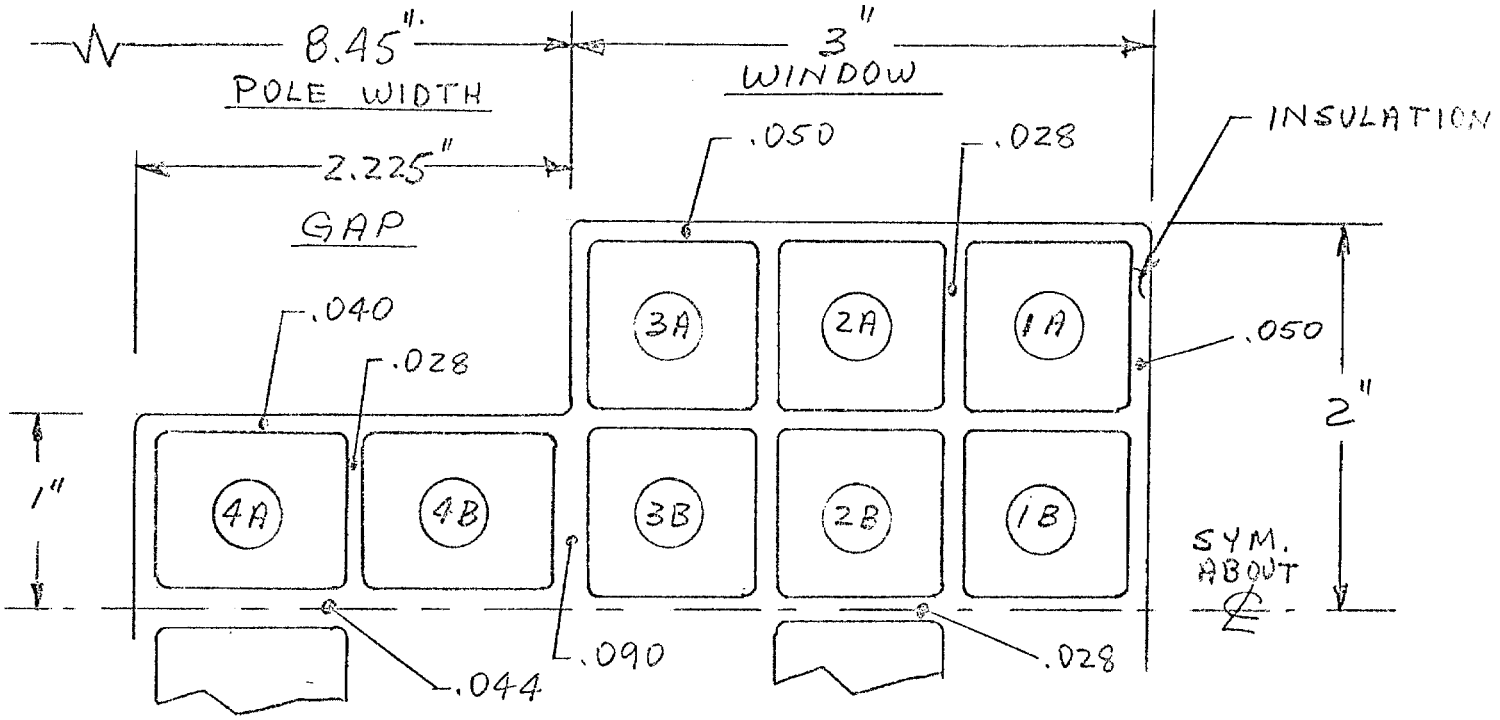

CONDUCTORS OUTSIDE DIMENSIONS

1) CONDUCTORS IN THE GAP

$2X + 2(.040) + .028 = 2.225''$

$X = \frac{2.225 - .108}{2} = \underline{1.0585 \text{ IN.}}$

$2Y + 2(.040) + .044 = 2''$

$Y = \frac{2 - .124}{2} = \underline{.9380 \text{ IN.}}$

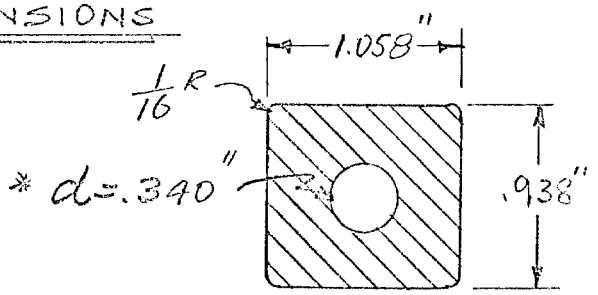

* (FROM A SEQUENT OF TRIAL SOLUTIONS A WATER HOLE DIAMETER OF $d = .340$ IN WAS OBTAINED)

2) CONDUCTORS IN THE WINDOW

$3X + 2(.050) + 2(.028) = 3''$

$X = \frac{3 - .156}{3} = \underline{.948 \text{ IN}}$

$4Y + 2(.050) + 3(.028) = 4''$

$Y = \frac{4'' - .184}{4} = \underline{.954 \text{ IN.}}$

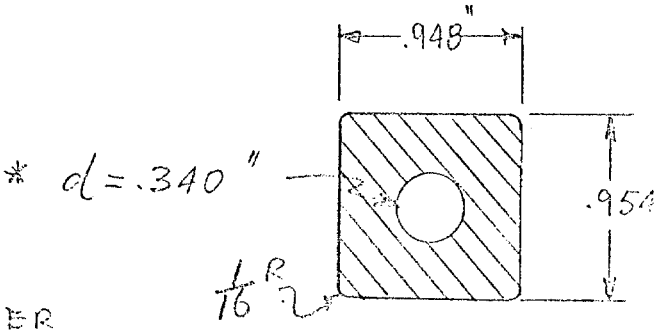

THE SAME WATER HOLE DIAMETER WILL BE USED FOR ALL WATER CIRCUITS

Subject

CONDUCTORS CROSS SECTIONAL AREA

ASSUME THE WATER HOLE DIAMETER TO BE:

$d = .340$ IN. (ONE OF THE TRIAL SOLUTIONS)

$\boxed{d = .340 \text{ IN.}}$

WATER HOLE AREA

$a = .0907 \text{ IN}^2$

THE SAME WATER HOLE WILL BE USED FOR BOTH CONDUCTORS

GAP CONDUCTOR AREA

	1.058 × .938	= .9924
$\frac{1}{16}$	CORNER RADIUS	= .0033
	WATER HOLE	= .0907
		.8983 IN^2

$\boxed{A_G = .8983 \text{ IN}^2}$

WINDOW CONDUCTOR AREA

	.948 × .954	= .9044
$\frac{1}{16}$	CORNER RADIUS	= .0033
	WATER HOLE	= .0907
		.8103

$\boxed{A_W = .8103 \text{ IN}^2}$

APPROXIMATE LENGTH OF ONE WATER CIRCUIT

THERE ARE 16 TURNS PER COIL; WITH 4 WATER CIRCUITS EACH CIRCUIT HAS 4 TURNS.

2(4 TURNS) × 239"		=	1912 IN.
ENDS	16 × 6"	=	96
	8 × 11"	=	88
			2096 IN.

$L = 2096$ IN

LENGTH OF CONDUCTOR IN GAP

$L_G = \frac{1}{4}\ 2096 = 524$ IN.

$\boxed{L_G = 524 \text{ IN}}$

LENGTH OF CONDUCTOR IN THE WINDOW

$L_W = \frac{3}{4}\ 2096 = 1572$ IN.

$\boxed{L_W = 1572 \text{ IN}}$

Subject

EQUIVALENT HYDRAULIC LENGTH

FOR EACH WATER CIRCUIT, THERE ARE 32 90° BENDS.
FOR 90° ELBOW WHERE INSIDE RADIUS $r = 2\text{-}8$ TIMES THE RADIUS OF THE WATER HOLE

$\frac{l}{d} = 20$ FOR EACH ELBOW

$l_T = 32 \times 20 \times 0.340'' = 218$ IN.

$L_{eq} = L + l_T = 2096 + 218 = 2314$ IN

$L_{eq} = \frac{2314}{12} = \underline{192.8 \text{ FT.}}$

$\boxed{L_{eq} = 192.8 \text{ FT}}$

RESISTANCE OF ONE WATER CIRCUIT

THE COILS WILL BE FABRICATED OF HIGH QUALITY ELECTRICAL-COPPER WITH 100% CONDUCTIVITY. THIS COPPER AT 20°C HAS A RESISTIVITY OF 0.67879 MICROHM (SQ. IN. PER IN.)

AT 20°C $R_{20} = \frac{\rho L}{A}$

$\rho = 0.67879\ \mu\Omega$
L = LENGTH IN.
A = AREA IN^2

$R_G = \rho \frac{L_G}{A_G} = \frac{0.67879 \quad 524}{.8983} = \underline{395.9\ \mu\Omega}$

$R_W = \rho \frac{L_W}{A_W} = \frac{0.67879 \quad 1572}{.8103} = \underline{1316.8\ \mu\Omega}$

TOTAL RESISTANCE FOR ONE WATER CIRCUIT (20°C)

$\boxed{R_T = 1.713\ m\Omega}$

Subject

THE RESISTANCE WILL BE CALCULATED AT AN AVERAGE TEMPERATURE OF 40°C

$$R_2 = R_1 \left[1 + \alpha_1 (t_2 - t_1) \right]$$

$t_2 = 40°C$
$t_1 = 20°C$
$\alpha_1 = .00393$

$$R_2 = 1.713 \left[1 + .00393(20) \right]$$

$$R_2 = 1.713 \left[1.0786 \right] = 1.847 \text{ m}\Omega$$

AT 40°C
$R = 1.847 \text{ m}\Omega$

AVERAGE POWER AT 400 BeV FOR ONE WATER CIRCUIT

$I = 4680$ A

$$P = .44(4680)^2 R \times 10^{-6} \text{ (KW)}$$

$P = 17.8$ KW

(400 BeV) $P = 17.8$ KW

WATER FLOW FOR ONE WATER CIRCUIT

WATER TEMPERATURE RISE $\Delta T = 16°C$ WAS SELECTED

$$Q \text{ (GPM)} = \frac{P \text{ (KW)} \; 3.8}{\Delta T \text{ (°C)}} = \frac{17.8 \quad 3.8}{16} = 4.227$$

(400 BeV) $Q = 4.227$ GPM

REYNOLD'S NUMBER

$$R_e = \frac{50.6 \; Q \; 62.4}{d \; \mu}$$

VISCOSITY $\mu = .65$ CENTIPOISE

$$R_e = \frac{50.6 \; (4.227) \; 62.4}{.340 \; (.65)} = 6.0 \times 10^4$$

$R_e = 6.0 \times 10^4$

Subject

FRICTION FACTOR FROM GRAPH

FOR SMOOTH PIPES $\boxed{f = .0197}$

PRESSURE DROP ACROSS ONE WATER CIRCUIT

$$\Delta P = \frac{2.16 \times 10^{-4} f (L_{eq}) 62.4 (Q)^2}{d^5} \quad (psi)$$

L = FT
Q = GPM
d = IN.

$$\Delta P = \frac{2.16 \times 10^{-4} (.0197) \; 192.8 (62.4) (4.227)^2}{(.340)^5} = 201 \text{ psi}$$

(400 Bev) $\boxed{\Delta P = 201 \text{ psi}}$

AVERAGE POWER AT 200 Bev FOR ONE WATER CIRCUIT

$I = 2270$ A

$R\,(40°C) = 1.847$ mΩ

$$P = .44 (2270)^2 \; 1.847 \times 10^{-6} \; (kw)$$

$P = 4.18$ kw

$\boxed{200 \text{ Bev} \quad P = 4.18 \text{ kw}}$

WATER FLOW FOR ONE WATER CIRCUIT (200 Bev)

FROM TRIAL SOLUTIONS $\Delta T = 5.5°C$

$$Q = \frac{4.18 \times 3.8}{5.5°C} = 2.88 \text{ GPM}$$

(200 Bev) $\boxed{Q = 2.88 \text{ GPM}}$

Subject

REYNOLD'S NUMBER (40°C)

$$R_e = \frac{50.6\,(2.88)\,62.4}{.340\,(.65)} = 4.1 \times 10^4$$

FRICTION FACTOR FROM GRAPH

FOR SMOOTH PIPES $\boxed{f = .0213}$

PRESSURE DROP ACROSS ONE WATER CIRCUIT

$$\Delta P = \frac{2.16 \times 10^{-4}\, f\,(L_{eq})\,62.4\,(Q)^2}{d^5} \quad (psi)$$

$$\Delta P = \frac{2.16 \times 10^{-4}\,(.0213)(192.8)\,62.4\,(2.88)^2}{(.340)^5} = \underline{101}\ psi$$

$$\boxed{(200\ Bev)\ \Delta P = 101\ psi}$$

Subject

B_1 MAGNET COIL DESIGN

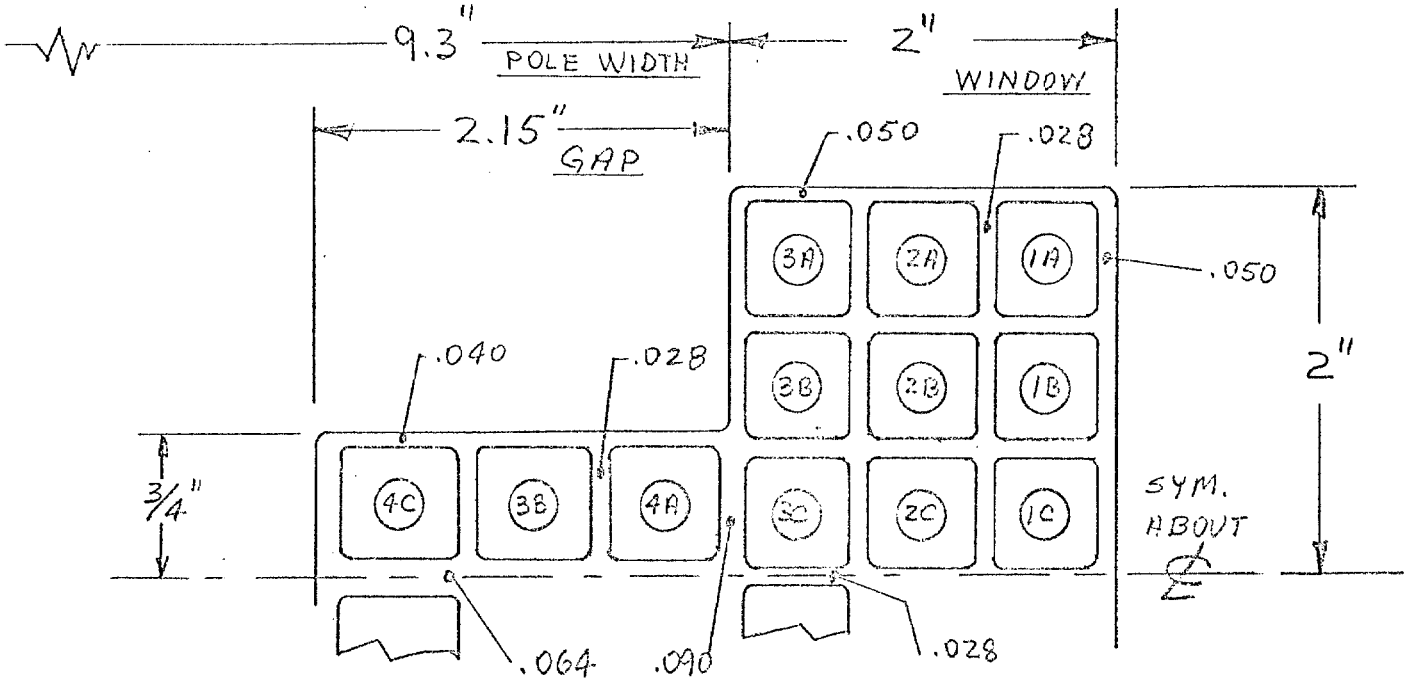

CONDUCTORS OUTSIDE DIMENSIONS

1) CONDUCTORS IN THE GAP

$3X + 2(.040) + 2(.028) = 2.15$

$X = \frac{2.15 - .136}{3} = .6713$ IN.

$2Y + 2(.040) + .064 = 1.5$

$Y = \frac{1.5 - .145}{2} = .6775$ IN.

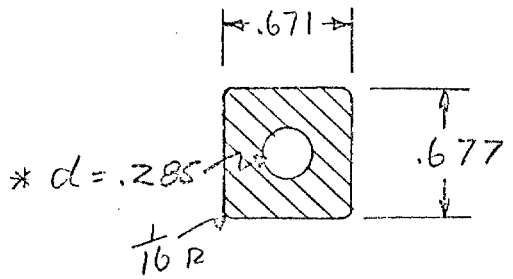

2) CONDUCTORS IN THE WINDOW

$3X + 2(.050) + 2(.028) = 2"$

$X = \frac{2 - .156}{3} = .6146$ IN.

$3Y + .014 + 2(.028) + .050 = 2"$

$Y = \frac{2 - .120}{3} = .6266$ IN

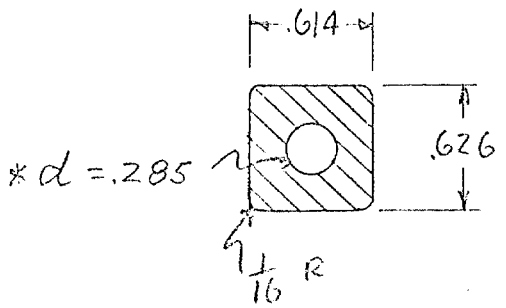

* TRIAL SOLUTIONS, SEE CALCULATIONS

Subject CONDUCTORS CROSS SECTIONAL AREA

ASSUME THE WATER HOLE DIAMETER TO BE

$d = .285$ IN. (ONE OF THE TRIAL SOLUTIONS)

$$\boxed{d = .285 \text{ IN}}$$

WATER HOLE AREA

$a = .0637 \text{ IN}^2$

SAME WATER HOLE WILL BE USED FOR BOTH CONDUCTORS

GAP CONDUCTOR AREA

	.671 x .677	= .4542 IN^2
$\frac{1}{16}$	CORNER RAD.	= .0033
	WATER HOLE	= .0637
		.3872 IN^2

$$\boxed{A_G = .3872 \text{ IN}^2}$$

WINDOW CONDUCTOR AREA

	.614 x .626	= .3843
$\frac{1}{16}$	CORNER RAD.	= .0033
	WATER HOLE	= .0637
		.3173 IN^2

$$\boxed{A_W = .3173 \text{ IN}^2}$$

APPROXIMATE LENGTH OF ONE WATER CIRCUIT

THERE ARE 12 TURNS PER COIL. WITH 12 HALF TURNS ON THE TOP AND 12 HALF TURNS ON THE BOTTOM OF THE COIL, THE TWO HALF COILS ARE CONNECTED IN PARALLEL. THEREFORE THERE ARE 12 CURRENT TURNS AND 24 GEOMETRICAL TURNS PER COIL.
WITH SIX WATER CIRCUITS, EACH CIRCUIT HAS FOUR HYDRAULIC, HALF CURRENT TURNS.

	2 (4 ($\frac{1}{2}$) TURNS) x 239"	=	1912
ENDS	16 x 6"	=	96
	8 x 11"	=	88
			2096 IN

$L = 2096$ IN

L (GAP) $= \frac{1}{4}$ 2096 $= 524$

L (WINDOW) $= \frac{3}{4}$ 2096 $= 1572$

$$\boxed{L_G = 524 \text{ IN}}$$

$$\boxed{L_W = 1572 \text{ IN}}$$

Subject

EQUIVALENT HYDRAULIC LENGTH

WITH 32 - 90° ELBOWS AND $\frac{\ell}{d} = 20$ SAME AS IN THE B_2 MAGNET

$\ell = 32 \times 20 \times .285'' = 182$ IN

$L_{eq} = L + \ell = 2096 + 182 = 2278$ IN

$L_{eq} = 190$ FT

$$\boxed{L_{eq} = 190 \text{ FT}}$$

RESISTANCE OF ONE WATER CIRCUIT

$R = \rho \frac{L}{A}$ (20°C) FOR 100% CONDUCTIVITY COPPER $\rho = .67879\ \mu\Omega$, $L = $ IN., $A = $ IN^2

$$R_G = \frac{.67879\, L_G}{A_G} = \frac{.67879 \quad 524}{.3872} = 918.6\ \mu\Omega$$

$$R_W = \rho \frac{L_W}{A_W} = \frac{.67879 \quad 1572}{.3173} = 3362.9\ \mu\Omega$$

TOTAL RESISTANCE AT 20°C $R_T = 4281\ \mu\Omega$.

AT AN AVERAGE TEMPERATURE OF 40°C THE TOTAL RESISTANCE IS:

$$R_{T_{40}} = 4281\ (1.0786) = 4617\ \mu\Omega.$$

(SEE B_2 CALCULATIONS)

$$\boxed{R = 4.617\ m\Omega}$$

AVERAGE POWER AT 400 BeV FOR ONE WATER CIRCUIT

THE CURRENT IN EACH HALF TURN IS $\frac{1}{2}$ 4680 AMP.

$P = .44\,(2340)^2\ 4.617 \times 10^{-6}$ (KW)

$P = 11.1$ KW

$$\boxed{(400\ \text{BeV})\quad P = 11.1\ \text{KW}}$$

Subject

WATER FLOW FOR ONE WATER CIRCUIT

WATER TEMPERATURE RISE $\Delta T = 16°C$
FOR 400 Bar

$$Q(GPM) = \frac{P\,(KW)\;3.8}{\Delta T\,(°C)} = \frac{11.1\;\;3.8}{16} = 2.63\ GPM$$

$$\boxed{(400\ Bar)\ Q = 2.63\ GPM}$$

REYNOLD'S NUMBER

$$R_e = \frac{50.6\;Q\;62.4}{d\;\mu} = \frac{50.6\,(2.63)\,62.4}{.285\;.65} = 4.5 \times 10^4$$

$$\boxed{R_e = 4.5 \times 10^4}$$

FRICTION FACTOR FROM GRAPH

FOR SMOOTH PIPES $\boxed{f = .021}$

PRESSURE DROP ACROSS ONE WATER CIRCUIT

$$\Delta P = \frac{2.16 \times 10^{-4}\, f\,(L_{eq})\,62.4\,(Q)^2}{d^5}$$

L = FT
Q = GPM
d = in.

$$\Delta P = \frac{2.16 \times 10^{-4}\,(.021)\;190\;\;62.4\,(2.63)^2}{(.285)^5} = 198\ PSI$$

$$\boxed{400\ Bar\ \ \Delta P = 198\ PSI}$$

Subject

AVERAGE POWER AT 200 Bar FOR ONE WATER CIRCUIT

THE CURRENT IN HALF TURN IS $\frac{2270}{2}$ AMP.

$$P = .44\,(1135)^2\, 4.617 \times 10^{-6} \text{ (KW)}$$

$$P = 2.61 \text{ KW}$$

$$\boxed{200 \text{ Bar } P = 2.61 \text{ KW}}$$

WATER FLOW FOR ONE WATER CIRCUIT

FROM TRIAL SOLUTIONS $\Delta T = 5.5\,^\circ C$

$$Q(\text{GPM}) = \frac{P(\text{KW})\ 3.8}{\Delta T(^\circ C)} = \frac{2.61\ \ 3.8}{5.5} = 1.80 \text{ GPM}$$

$$\boxed{200 \text{ Bar } Q = 1.80 \text{ GPM}}$$

REYNOLD'S NO. (40°C)

$$R_e = \frac{50.6\,(1.80)\,62.4}{(.285)(.65)} = 3.0 \times 10^4$$

$$R_e = 3.0 \times 10^4$$

FRICTION FACTOR FROM GRAPH

FOR SMOOTH PIPES $\boxed{f = .023}$

PRESSURE DROP ACROSS ONE WATER CIRCUIT

$$\Delta P = \frac{2.16 \times 10^{-4}\,(.023)\,(190)\,62.4\,(1.8)^2}{(.285)^5} = 101 \text{ psi}$$

$$\boxed{(200 \text{ Bar})\ \Delta P = 101 \text{ psi}}$$